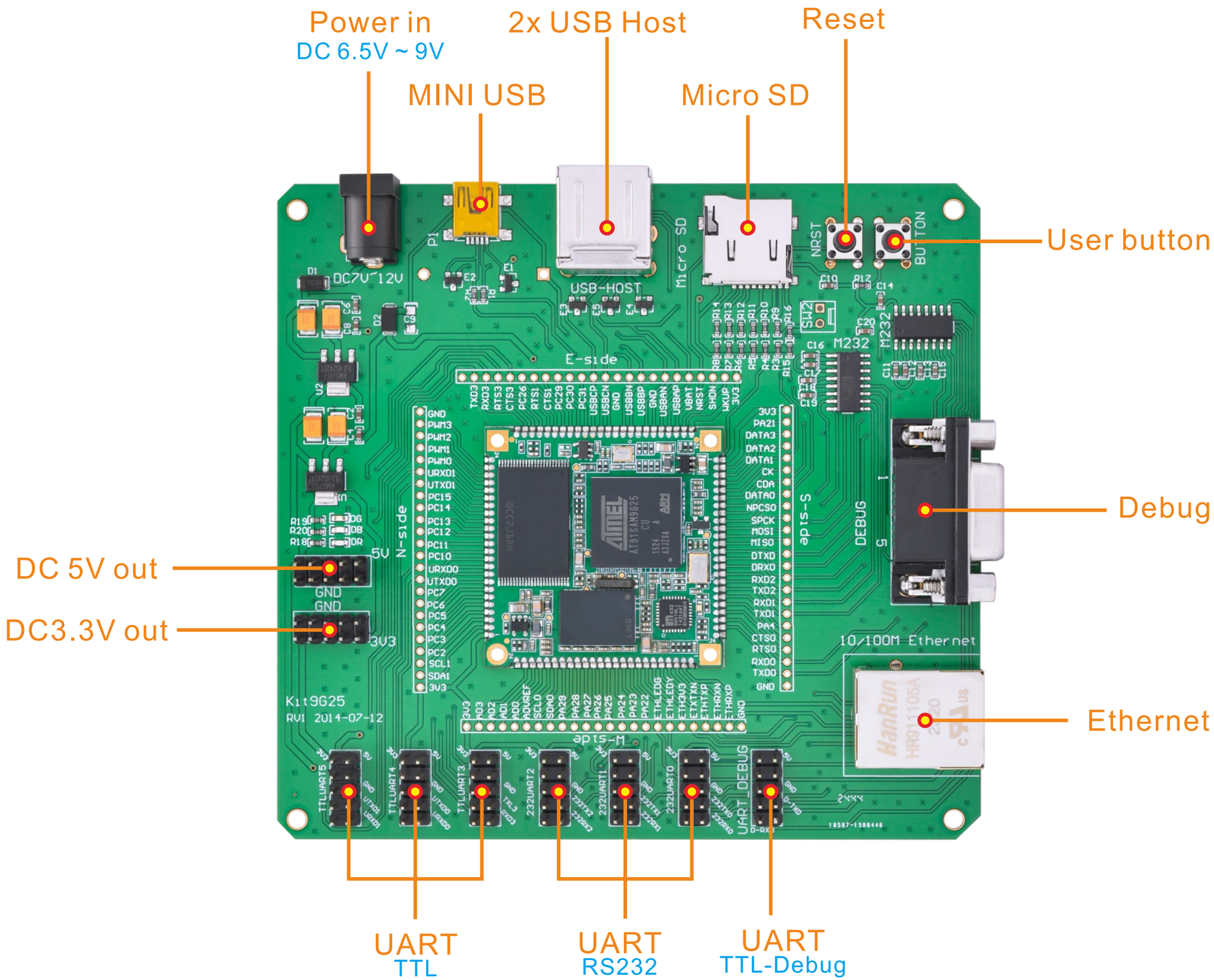
Power in
DC 6.5V ~ 9V
2x USB Host
Reset
MINI USB
Micro SD
User button
Debug
DC 5V out
DC3.3V out
Ethernet
UART
TTL
UART
RS232
UART
TTL-Debug