LGA3576 Reference User Manual

V1.202610

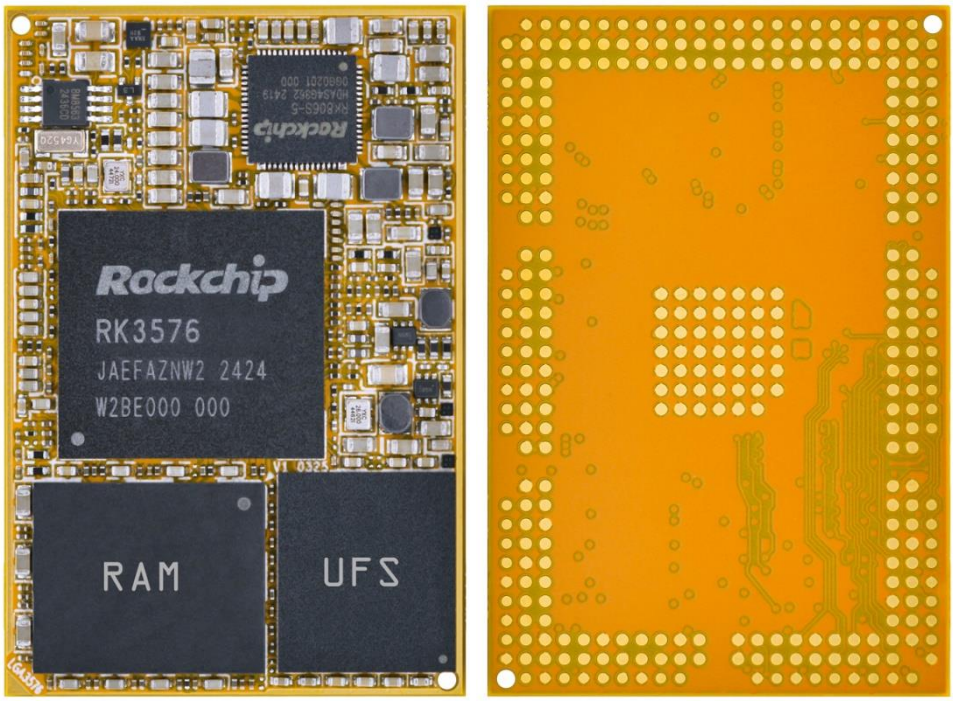

Boardcon Embedded Design

www.armdesigner.com

1. Introduction

1.1. About this Manual

This manual is intended to provide the user with an overview of the board and benefits, complete features specifications, and set up procedures. It contains important safety information as well.

1.2. Feedback and Update to this Manual

To help our customers make the most of our products, we are continually making additional and updated resources available on the Boardcon website (www.boardcon.com, www.armdesigner.com).
These include manuals, application notes, programming examples, and updated software and hardware. Check in periodically to see what's new!
When we are prioritizing work on these updated resources, feedback from customers is the number one influence, If you have questions, comments, or concerns about your product or project, please no hesitate to contact us at support@armdesigner.com.

1.3. Limited Warranty

Boardcon warrants this product to be free of defects in material and workmanship for a period of one year from date of buy. During this warranty period Boardcon will repair or replace the defective unit in accordance with the following process:
A copy of the original invoice must be included when returning the defective unit to Boardcon. This limited warranty does not cover damages resulting from lighting or other power surges, misuse, abuse, abnormal conditions of operation, or attempts to alter or modify the function of the product.
This warranty is limited to the repair or replacement of the defective unit. In no event shall Boardcon be liable or responsible for any loss or damages, including but not limited to any lost profits, incidental or consequential damages, loss of business, or anticipatory profits arising from the use or inability to use this product.
Repairs make after the expiration of the warranty period are subject to a repair charge and the cost of return shipping. Please contact Boardcon to arrange for any repair service and to obtain repair charge information.

Content

1 LGA3576 Introduction 3
1.1 Summary 3
1.2 Features 3
1.3 LGA3576 Block Diagram 5
1.4 LGA3576 specifications 6
1.5 LGA3576 PCB Dimension 7
1.6 LGA3576 Pin Definition 8
1.7 Development Kit (Idea3576) 24
1.8 Demo Box Case (Idea3576) 24
2 Hardware Design Guide 25
2.1 Peripheral Circuit Reference 25
2.2 PCB Footprint 26
3 Product Electrical Characteristics 27
3.1 Dissipation and Temperature 27
3.2 Reliability of Test 27

1 LGA3576 Introduction

1.1 Summary

The LGA3576 system-on-module is powered by Rockchip's RK3576 with a quad-core Cortex-A72 and a quad-core Cortex-A53 processor, embedded Mali-G52 MC3 GPU and 6.0 TOPs NPU.
It is specifically designed for high-performance devices such as 4K video surveillance systems, AI edge computing devices, intelligent interactive systems, personal computers, and robots. This high-performance multimedia processing and acceleration engine enables faster technology adoption while improving overall solution efficiency.
In particular, the LGA3576 is a full-function LPDDR5+UFS subminiature system module.

1.2 Features

- **Microprocessor**
  - Quad-core Cortex-A72 up to 2.2GHz
  - Quad-core Cortex-A53 up to 1.8GHz
  - 48KB I-cache 32KB D-cache and 1MB L2 for A72 each core, 32KB I-cache 32KB D-cache and 512KB L2 for A53 each core
  - 6.0 TOPS Neural Process Unit
  - Mali-G52 MC3 up to 1.0GHz
  - Single-core Cortex-M0 for user application
- **Memory Organization**
  - LPDDR5 RAM up to 8GB
  - UFS up to 512GB
  - Support eMMC up to 256GB
  - Support FSPI Flash
- **Boot ROM**
  - Supports system code download through USB OTG
- **Secure system**
  - Embedded two cipher engine
  - Support key ladder to guarantee key secure
  - Support secure OS and data scrambling
  - Support OTP
- **Video Decoder/Encoder**
  - H.265/VP9/AVS2/AV1 decoding up to 8K@30fps or 4K@120fps
  - H.264/AVC decoding up to 4K@30fps
  - H.264/H.265 encoding up to 4K@60fps
  - Picture size up to 65520 x 65520
- **Display Subsystem**
  - **Video Output**
    - Supports HDMI 2.1 TX with ARC, up to 4K@120fps

or EDP TX interface up to 4K@60Hz
HDMI 2.1 support FRL mode
- Supports 4 lanes MIPI DSI up to 4K@60Hz
- Supports PD1.4a interface up to 4K@60fps
- Supports RGB 24bit output
- Supports E-ink screen interface

- **Video/Image Input**
  - Supports 3-CH MIPI 4lanes CSI interfaces
    or 4-CH MIPI 2lanes + 1-CH 4lanes CSI interfaces
  - Supports DVP 8/16-bit input

- **Audio**
  - Five I2S/PCM interfaces
  - Support 8-ch TX/RX on I2S0/1
  - Support Mic array Up to 8ch PDM/TDM interface
  - Support 2-ch SPDIF output
  - Support 2-ch SPDIF input
  - Support voice activity detection
- **USB / PCIE/ SATA3**
  - One USB2.0 OTG interface
  - One Type-C or DP interface
  - One USB3.0 Host or PCIE2.1x1 or SATA3 interface.
  - One PCIE2.1x1 or SATA3 interface.
  - SATA3 support five device each port via PM switch
- **Ethernet**
  - Support 2-CH RGMII or RMII interfaces
- **I2C**
  - Up to 9-CH I2C
  - Support standard mode and fast mode(up to 400kbit/s)
- **I3C**
  - Up to 2-CH I3C
  - Support HDR mode(up to 30Mbps)
  - I2C compatible
- **SDIO / SDMMC**
  - Support SDIO 3.0 protocol
  - Support SD3.0 card
- **SPI**
  - Up to 5-ch SPI controllers,
  - Full-duplex synchronous serial interface
- **UART**
  - Support up to 12 UARTs
  - UART2 with 2 wires for debug
  - Embedded two 64byte FIFO
- **CAN**
  - Support up to two CAN controller

- Support CAN FD protocol

- **ADC**
  - Up to 7-CH ADC channels
  - 12-bit resolution up to 1MS/s sampling rate
  - Voltage input range between 0V to 1.8V
- **PWM**
  - Up to 4 PWMs with interrupt-based operation
  - Support 32bit time/counter facility
- **Power unit**
  - PMU RK806 on board
  - 3.4 ~ 5.5V main power input
  - 1.8V and 3.3V max 500mA output
  - PLDO2 0.6 ~ 3.3V max 300mA output
  - Very low RTC consume current, less 5uA at 3V button Cell.

1.3 LGA3576 Block Diagram

1.3.1 RK3576 Block Diagram

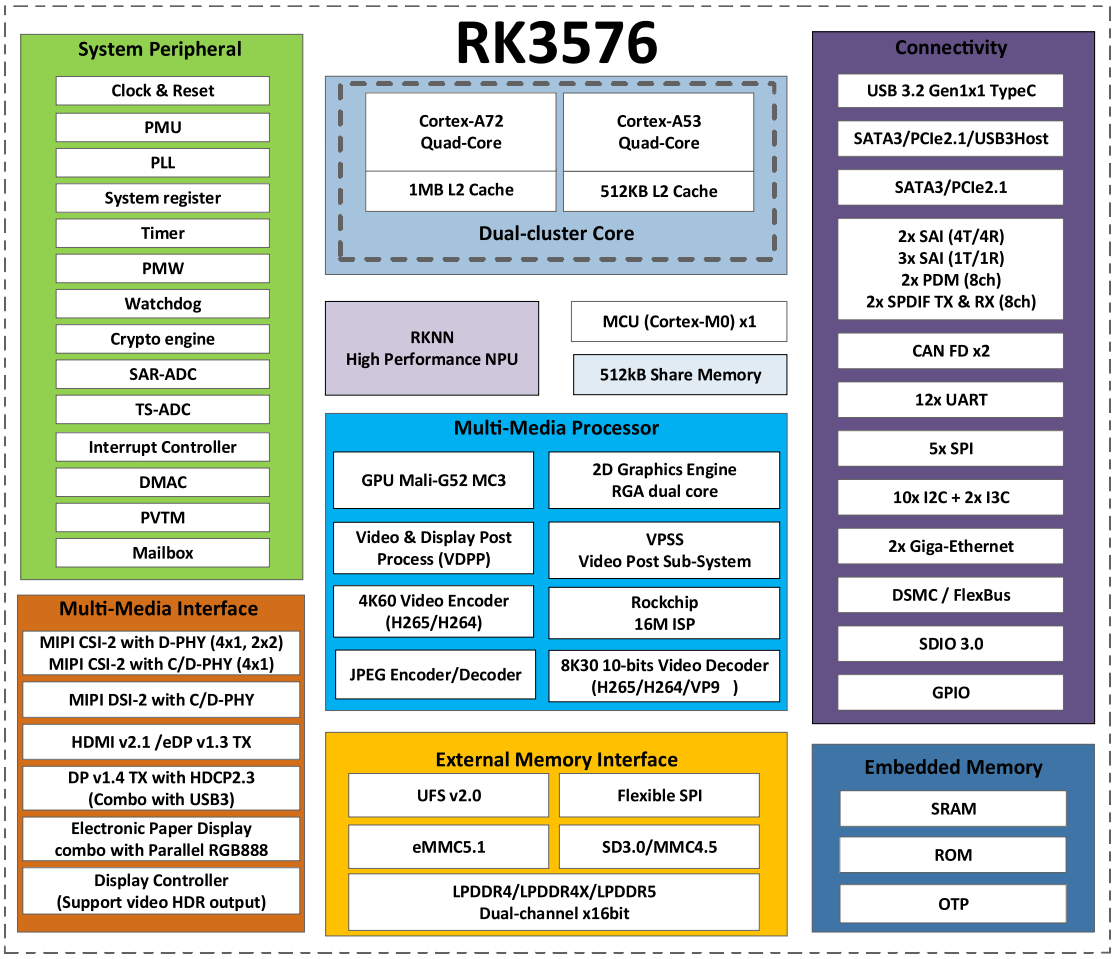

1.3.2 Development board (Idea3576) Block Diagram

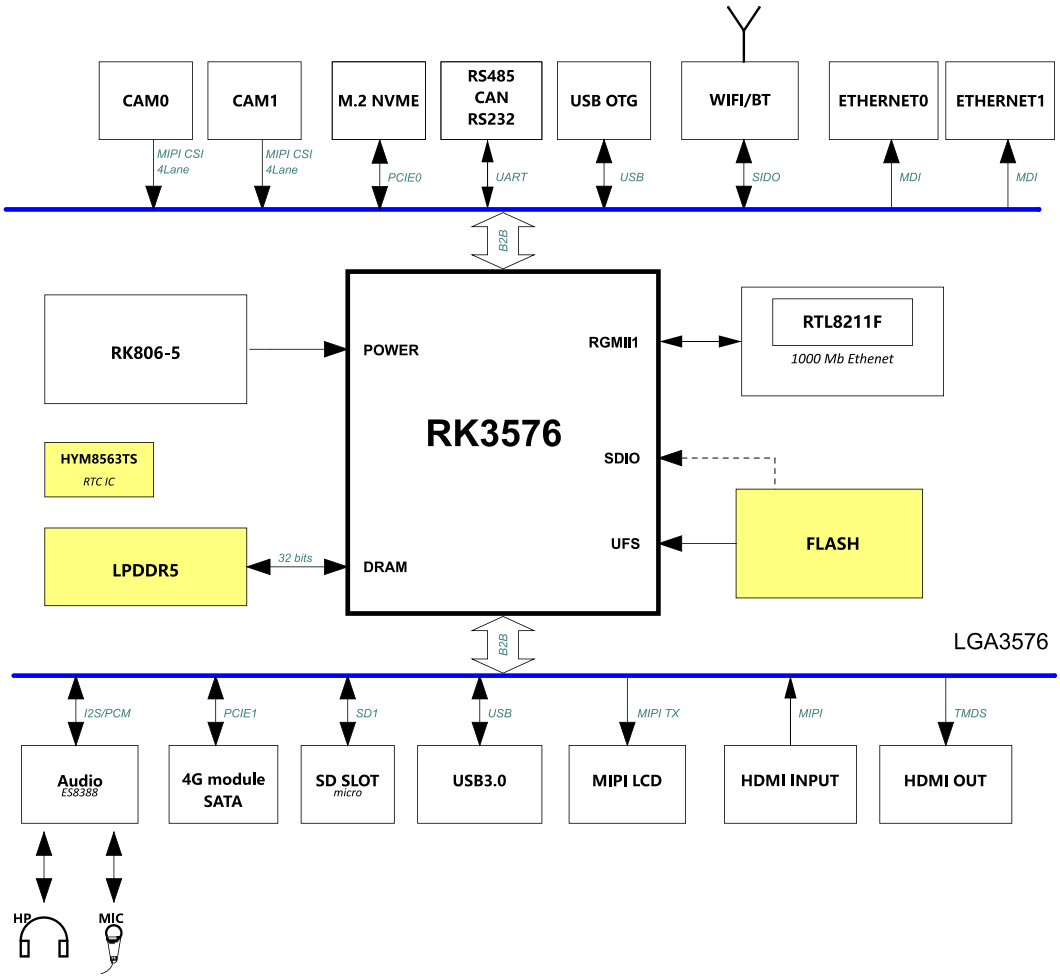

1.4 LGA3576 specifications

Feature	Specifications
CPU	Quad-core Cortex-A72 and quad-core Cortex-A53
DDR	4GB LPDDR5 (up to 8GB)
UFS FLASH	32GB (up to 512GB)
eMMC FLASH	Option on carrier board
Power	DC 3.4 ~ 5.5V
EDP/MIPI DSI	1-CH EDP, 1-CH MIPI DSI
I2S	5-CH
MIPI CSI	3-CH 4-Lane or 4-CH 2-Lane + 1-CH 4-Lan CSI (up to 5 CSI Cameras)
SATA	2-CH
HDMI output	1-CH (EDP option)
DP output	1-CH
RGB output	1-CH 24bit

Feature	Specifications
EBC output	1-CH (option)
Flex Bus	option
CAN	2-CH
USB	1-CH Type-C and 1-CH USB Host3.0
Ethernet	2-ch RGMII
SDMMC	2-CH
SPDIF TX	2-CH
SPDIF RX	2-CH
I2C	9-CH
I3C	2-CH
SPI	5-CH
CAN	2-CH
UART	11-CH, 1-CH(DEBUG)
PWM	4-CH
ADC IN	7-CH
Board Dimension	45 x 30mm

1.5 LGA3576 PCB Dimension

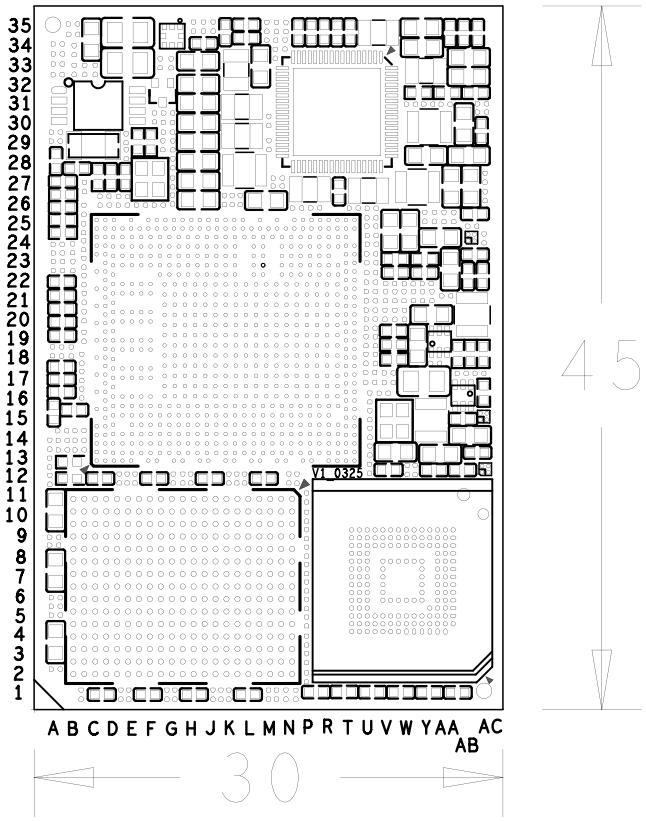

1.6 LGA3576 Pin Definition

Pin	Signal	Description or functions	GPIO serial	IO Voltage
A2	GND	Ground		0V
A3	LCDC_D8/EBC_SDDO8/DSMC_INT3	I2C9_SDA_M3/UART11_CTS_M0/SPI4_MOSI_M1/SAI2_LRCK_M2/FLEXBUS0_D10/FLEXBUS0_CSN_M2	GPIO3_C3_d /PWM2_CH1_M3	3.3V
A4	HP_CTL_H	SPI3_CLK_M2/SAI4_SDI_M0/SAI1_SDO0_M0	GPIO4_A7_d /PWM2_CH6_M0	3.3V
A5	LCDC_D13/EBC_SDDO13/DSMC_DQS1	SPI3_CSN0_M1/ETH0_TXCLK_M0/FLEXBUS0_CLK	GPIO3_B6_d /PWM0_CH1_M3	3.3V
A6	GND	Ground		0V
A7	LCDC_D18/EBC_SDCE2/DSMC_DATA12	UART10_TX_M0/SPI4_CSN0_M1/ETH0_RXD1_M0/PDM1_CLK0_M2/FLEXBUS0_D4	GPIO3_B1_d /PWM1_CH3_M3	3.3V
A8	LCDC_D20/EBC_VCOM/DSMC_DATA13	UART10_RTS_M0/UART1_TX_M2/ETH0_RXCTL_M0/PDM1_CLK1_M2/FlexBUS0_D5	GPIO3_A7_d	3.3V
A9	LCDC_D23/EBC_SDSHR/DSMC_RDYN	SPI2_CLK_M2/UART1_CTS_M2/ETH0_CLKOUT_25M_M0/SAI4_SDI_M1/FlexBUS1_D11/FlexBUS0_CSn_M0	GPIO3_A4_d /PWM1_CH0_M3	3.3V
A10	GMAC1_MDC	UART6_RTS_M1/I2C9_SDA_M2/ISP_PRELIGHT_TRIG_M0/PWM2_CH4_M2	GPIO2_D4_d	1.8V
A14	GMAC1_TXD1	UART4_RTS_M0/I2C5_SDA_M2/SAI4_LRCK_M3/PWM0_CH1_M2	GPIO2_C7_d	1.8V
A15	GND	Ground		0V
A16	GMAC1_RXD1	UART6_TX_M1/I3C1_SCL_M0/SAI4_MCLK_M3/CAM_CLK0_M1/PWM2_CH2_M2	GPIO2_D2_d	1.8V
A17	GMAC1_RXD0	UART4_RX_M0/I2C6_SDA_M2/SAI4_SDO_M3/PWM2_CH1_M2	GPIO2_D1_d	1.8V
A18	SAI0_SDI3_M0/E0_TD2_M1_1V8	UART7_CTS_M1/SPI4_MOSI_M3/PDM0_SDI0_M3/SATA0_ACTLED_M0/VI_CIF_D9	GPIO2_B4_d /ETH0_TXD2	1.8V
A19	SAI0_SDO1_M0/E0_TCT_M1_1V8	I2C4_SDA_M2/UART8_RX_M1/ETH0_TXCTL_M1/VI_CIF_D14	GPIO2_A7_d	1.8V

Pin	Signal	Description or functions	GPIO serial	IO Voltage
A20	SAI0_SCLK_M0/E0_RD3_M1_1V8	I2C8_SCL_M2/UART8_CTS_M1/UART7_RX_M0	GPIO2_B6_d /ETH0_RXD3	1.8V
A21	SPDIF_RX1_M1/E0_RCT_M1_1V8	UART3_RTS_M0/SPI3_MISO_M0/SAI3_SDO_M2//CAN_TX_M3/VI_CIF_CLKO/MIPI_TE_M1	GPIO3_A2_d /ETH0_RXCTL	1.8V
A22	GND	Ground		0V
A26	SDMMC0_D1	DSM_ALN_M0/I2C8_SDA_M0/UART0_TX_M1/UART7_TX_M2/SPI0_MISO_M1/CAN0_TX_M0/SAI3_MCLK_M3	GPIO2_A1_d /PWM2_CH3_M0 /FSPI1_D1_M0	3.3V
A27	eMMC_D6	I2C9_SDA_M0/SPI0_MISO_M2/PDM0_CLK1_M1/SAI3_LRCK_M0/FSPI0_D6	GPIO1_A6_u	1.8V
A28	eMMC_D2	UART6_RTS_M2/UART7_TX_M1/PDM0_SDI3_M1/SAI0_SDI3/SDO1_M2/FSPI0_D2	GPIO1_A2_u	1.8V
A29	eMMC_D0	I2C2_SCL_M1/UART7_RTS_M1/SAI0_SCLK_M2/FSPI0_D0	GPIO1_A0_u	1.8V
A30	SDMMC1_CLK_M0_1V8	UART3_RX_M2/PDM0_CLK0_M2/SAI3_MCLK_M1	GPIO1_C1_d	1.8V
A31	SDMMC1_D3_M0_1V8	UART3_RTS_M2/SPI1_CSN0_M0/PCIE0_WAKE_M1/SAI3_SDI_M1	GPIO1_B7_d	1.8V
A32	SDMMC1_D1_M0_1V8	I2C9_SCL_M1/SPI1_MOSI_M0/PCIE1_WAKE_M1/SAI3_LRCK_M1/PWM1_CH1_M1	GPIO1_B5_d	1.8V
A33	SARADC_VIN5	ADC_IN5		1.8V
A34	SARADC_VIN4	ADC_IN4		1.8V
B1	LCDC_CLK/EBC_SDOE/DSMC_RESETN	UART5_RTS_M0/SPI3_CSN1_M1/SAI4_SCLK_M1/FLEXBUS1_D12_M0/FLEXBUS0_D15_M0/FLEXBUS1_CSn_M1/CAM_CLK0_OUT_M0	GPIO3_D7_d /PWM2_CH7_M3	3.3V
B3	GND	Ground		0V
B4	SPK_CTL_H	SPI3_CS1_M2/SPI4_CS0_M2/PDM1_SDI0_M1/SAI1_SDI0_M0/SAI4_SDO_M0	GPIO4_B3_d /PWM2_CH7_M0	3.3V

Pin	Signal	Description or functions	GPIO serial	IO Voltage
B5	IRC_BIN	UART2_CTS_M1/UART6_CTS_M0/UART5_RX_M1/SPI4_MOSI_M2/PDM1_SDI2_M1/SAI1_SDI2_M0/SAI1_SDO2_M0/FlexBUS1_D14_M1	GPIO4_B1_d	3.3V
B6	LCDC_D15/EBC_SDDO15/DSMC_DATA9	UART9_RTS_M1/ETH0_TXD1_M0/SPDIF_RX1_M0/FLEXBUS0_D1	GPIO3_B4_d /PWM1_CH4_M3	3.3V
B7	LCDC_D17/EBC_SDCE1/DSMC_DATA11	I2C8_SDA_M3/UART9_RX_M1/ETH0_RXD0_M0/PDM1_SDI1_M2/FLEXBUS0_D3	GPIO3_B2_d	3.3V
B8	GND	Ground		0V
B9	LCDC_D22/EBC_GDSP/DSMC_DATA15	SPI2_CSn1_M2/UART1_RTS_M2/ETH0_MDIO_M0/PDM1_SDI3_M2/FlexBUS0_D7	GPIO3_A5_d /PWM1_CH1_M3	3.3V
B10	GMAC1_MDIO	UART6_CTS_M1/I2C9_SCL_M2/ISP_FLASH_TRIGOUT_M0/PWM2_CH5_M2	GPIO2_D5_d	1.8V
B11	GND	Ground		0V
B13	GMAC1_TXCTL	UART4_TX_M0/I2C6_SCL_M2/SAI4_SDI_M3/PWM2_CH0_M2	GPIO2_D0_d	1.8V
B14	GMAC1_TXD2	UART11_RTS_M1/SPI1_MISO_M1/PDM1_SDI3_M0/SAI2_LRCK_M1/VI_CIF_D2/PWM0_CH0_M2	GPIO2_C3_d	1.8V
B15	GMAC1_TXCLK	UART11_RX_M1/SPI1_CLK_M1/PDM1_CLK0_M0/SAI2_SDI_M1/VI_CIF_D0/PWM4_CH2_M2	GPIO2_C5_d	1.8V
B16	GMAC1_RXDV_CRS	UART6_RX_M1/I3C1_SDA_M0/PWM3_CH2_M2	GPIO2_D3_d	1.8V
B17	GMAC1_RXD3	UART9_TX_M0/SPI1_CSn1_M1/PDM1_CLK1_M0/SAI2_MCLK_M1/VI_CIF_D4/PWM1_CH1_M2	GPIO2_C1_d	1.8V
B18	SAI0_SDI0_M0/E0_TD1_M1_1V8	UART1_TX_M1/PDM0_SDI3_M3/VI_CIF_D13	GPIO2_B0_d /ETH0_TXD1	1.8V
B19	SAI0_SDI1_M0/E0_TD0_M1_1V8	UART1_RX_M1/PDM0_SDI2_M3/VI_CIF_D12	GPIO2_B1_d /ETH0_TXD0	1.8V
B20	SAI0_LRCK_M0/E0_RD2_M1_1V8	I2C8_SDA_M2/UART8_RTS_M1/UART7_TX_M0	GPIO2_B7_d /ETH0_RXD2	1.8V

Pin	Signal	Description or functions	GPIO serial	IO Voltage
B21	SAI0_SDO0_M0/E0_RD0_M1_1V8	I2C4_SCL_M2/UART8_TX_M1/SPI4_CSn1_M3/VI_CIF_D15	GPIO2_A6_d /ETH0_RXD0	1.8V
B22	SDMMC0_CLK	I3C1_SDA_PU_M1/I2C5_SCL_M0/UART5_TX_M2/SPI0_CLK_M1/SAI3_SCLK_M3	GPIO2_A5_d /FSPI1_CLK_M0	3.3V
B23	SDMMC0_D3	I3C1_SDA_M1/DSM_ARN_M0/UART5_CTSN_M2/SAI3_SDI_M3/CAN1_TX_M0	GPIO2_A3_d /FSPI1_D3_M0 /JTAG_TMS_M0	3.3V
B25	SDMMC0_D0	DSM_ALP_M0/I2C8_SCL_M0/UART0_RX_M1/UART7_RX_M2/SPI0_MOSI_M1/CAN0_RX_M0	GPIO2_A0_d /PWM2_CH2_M0 /FSPI1_D0_M0	3.3V
B26	eMMC_DATA_STROBE	SPI0_CSn1_M2/PDM_SDI0_M1/SAI3_SDO_M0/SAI0_SDI0_M2/FSPI0_DQS	GPIO1_B2_d	1.8V
B27	eMMC_D7	SPI0_CLK_M2/SAI3_SDI_M0/SAI0_SDI0_M2/FSPI0_D7	GPIO1_A7_u	1.8V
B28	eMMC_D4	SPI0_CSn0_M2/SAI3_MCLK_M0/SAI0_MCLK_M2/FSPI0_D4	GPIO1_A4_u	1.8V
B29	eMMC_D1	UART_CTS_M1/I2C2_SDA_M1/SAI0_LRCK_M2/FSPI0_D1	GPIO1_A1_u	1.8V
B30	GND	Ground		0V
B31	SDMMC1_CMD_M0_1V8	UART3_TX_M2/SPI1_CSN1_M0/PDM0_SDI2_M2/PWM0_CH0_M1	GPIO1_C0_d	1.8V
B32	SDMMC1_D0_M0_1V8	I2C9_SDA_M1/SPI1_CLK_M0/PCIE1_CLKREQ_M1/SAI3_SCLK_M1/PWM1_CH0_M1	GPIO1_B4_d	1.8V
B33	SARADC_VIN6	ADC_IN6		1.8V
B34	SARADC_VIN7	ADC_IN7		1.8V
B35	SARADC_VIN3	ADC_IN3		1.8V
C1	GND	Ground		0V
C2	LCDC_D5/EBC_SDDO5/DSMC_DATA3	UART8_TX_M0/SPI1_MOSI_M2/SAI1_LRCK_M1/FLEXBUS1_D5	GPIO3_C6_d	3.3V
C3	LCDC_D2/EBC_SDDO2/DSMC_CSN2	I3C1_SDA_PU_M2/SPI4_CLK_M1/SAI2_MCLK_M2/FLEXBUS0_D11/FLEXBUS1_CS_M2	GPIO3_D1_d	3.3V

Pin	Signal	Description or functions	GPIO serial	IO Voltage
C4	LCDC_D14/EBC_SDDO14/DSMC_DATA8	UART9_CTS_M1/ETH0_TXD0_M0/SPDIF_TX1_M0/FLEXBUS0_D0	GPIO3_B5_d /PWM1_CH5_M3	3.3V
C5	GND	Ground		0V
C6	LCDC_D16/EBC_SDCE0/DSMC_DATA10	I2C8_SCL_M3/UART9_TX_M1/ETH0_TXCTL_M0/PDM1_SDI0_M2/FLEXBUS0_D2	GPIO3_B3_d	3.3V
C7	LCDC_D19/EBC_SDCE3/DSMC_CSN1	UART10_RX_M0/SPI2_MOSI_M2/ETH0_MCLK_M0/SAI4_MCLK_M1/FLEXBUS0_D8	GPIO3_B0_d /PWM0_CH0_M3	3.3V
C8	LCDC_D9/EBC_SDDO9/DSMC_INT1	I2C9_SCL_M3/UART11_RTS_M0/SPI4_MISO_M1/SAI2_SCLK_M2/FLEXBUS0_D9	GPIO3_C2_d /PWM2_CH0_M3	3.3V
C9	LCDC_D21/EBC_GDOE/DSMC_DATA14	UART10_CTS_M0/UART1_RX_M2/ETH0_MDC_M0/PDM1_SDI2_M2/FlexBUS0_D6	GPIO3_A6_d /PWM1_CH2_M3	3.3V
C10	GND	Ground		0V
C11	GMAC1_CLK1_25M_OUT_M0	UART9_RTS_M0/I3C1_SDA_PU_M0/SPDIF_RX0_M2/CAM_CLK1_M1/SAI3_MCLK_M2/ETH0_MCLK_M1	GPIO2_D6_d /PWM2_CH6_M2	1.8V
C13	GMAC1_MCLKINOUT_M0	UART9_CTS_M0/SPI3_CSN1_M0/SPDIF_TX0_M2/CAM_CLK2_M1/SAI0_SDO3_M0/ETH_CLK0_25M_OUT_M1	GPIO2_D7_d /PWM2_CH7_M2	1.8V
C14	GMAC1_TXD3	UART11_TX_M1/SPI1_CSn0_M1/PDM1_SDI0_M0/SAI2_SDO_M1/VI_CIF_D1	GPIO2_C4_d /PWM1_CH3_M2	1.8V
C15	GMAC1_TXD0	UART4_CTS_M0/I2C5_SCL_M2/SPI4_SCLK_M3	GPIO2_C6_d /PWM1_CH5_M2	1.8V
C16	GMAC1_RXD2	UART9_RX_M0/PDM1_SDI11_M0/ETH0_PTP_REFCLK_M1/VI_CIF_D5	GPIO2_C0_d /PWM1_CH0_M2	1.8V
C17	GMAC1_RXCLK	UART11_CTS_M1/SPI1_MOSI_M1/PDM1_SDI2_M0/SAI2_SCLK_M1/VI_CIF_D3/ETH0_PPSTRIG_M1	GPIO2_C1_d /PWM1_CH2_M2	1.8V
C18	GND	Ground		0V
C19	SAI0_SDI2_M0/E0_TD3_M1_1V8	UART1_CTS_M1/SPI4_CSn0_M3/PDM0_SDI1_M3/PCIE0_CLKREQ_M0/VI_CIF_D11	GPIO2_B2_d /ETH0_TXD3	1.8V

Pin	Signal	Description or functions	GPIO serial	IO Voltage
C20	SAI0_SDO2_M0/E0_TCK_M1_1V8	UART1_RTS_M1/SPI4_CLK_M3/PDM0_CLK1_M3/PCIE1_CLKREQ_M0/VI_CIF_D10	GPIO2_B3_d /ETH0_TXCK	1.8V
C21	CSI0_PWREN/E0_RD1_M1_1V8	CAN1_RX_M3/UART3_RTS_M0/SPI3_CSn0_M0/SPDIF_TX1_M1/SAI3_SDI_M2/ETH1_PTP_REFCLK_M0/VI_CIF_CLKI	GPIO3_A3_d /ETH0_RXD1	1.8V
C22	SAI0_MCLK_M0/E0_RCK_M1_1V8	UART7_RTS_M0/SPI4_MISO_M3/PDM0_CLK0_M3/SATA1_ACTLED_M0/VI_CIF_D8	GPIO2_B5_d /ETH0_RXCK	1.8V
C23	SDMMC0_D2	I3C1_SCL_M1/DSM_ARP_M0/UART5_RTSN_M2/SAI3_LRCK_M3/CAN1_RX_M0	GPIO2_A2_d /FSPI1_D2_M0 /JTAG_TCK_M0	3.3V
C25	SDMMC0_CMD	I2C5_SDA_M0/UART5_RX_M2/SPI0_CSN0_M1/SAI3_SDO_M3	GPIO2_A4_d /PWM2_CH4_M0 /FSPI1_CSN0_M0	3.3V
C26	eMMC_CLKOUT	PDM0_CLK0_M1/SAI0_SDI1_M2/SAI0_SDO3_M2/FSPI0_CLK	GPIO1_B1_d /PWM2_CH7_M1	1.8V
C27	GND	Ground		0V
C28	eMMC_D3	UART6_CTS_M2/UART7_RX_M1/PDM0_SDI1_M1/SAI0_SDI2/SDO2_M2/FSPI0_D3	GPIO1_A3_u	1.8V
C29	eMMC_D5	I2C9_SCL_M0/SPI0_MOSI_M2/PDM0_SDI2_M1/SAI3_SCLK_M0/FSPI0_D5	GPIO1_A5_u	1.8V
C30	eMMC_CMD	I2C7_SCL_M0/UART6_TX_M2/FSPI0_CSn1/FSPI0_RST	GPIO1_B0_u	1.8V
C31	eMMC_RSTn	I2C7_SDA_M0/UART6_RX_M2/FSPI0_CS0/MIPI_TE_M3	GPIO1_B3_u /PWM2_CH1_M0	1.8V
C32	SDMMC1_D2_M0_1V8	UART3_CTS_M2/SPI1_MISO_M0/PCIE0_CLKREQ_M1/SAI3_SDO_M1	GPIO1_B6_d	1.8V
C33	GND	Ground		0V
C34	SARADC_VIN2	ADC_IN2		1.8V
C35	VDD_CORE_5V	System Power Input		3.4V-5.5V
D1	PCIE1_CLKREQn_M2	I2C2_SDA_M2/UART5_CTS_M1/SPI4_CS1_M2/SAI1_LRCK_M0/FlexBUS1_D12_M1	GPIO4_A5_d	3.3V

Pin	Signal	Description or functions	GPIO serial	IO Voltage
D2	HDMI_TX_ON_H	I2C4_SDA_M1/UART6_RX_M0/SPI3_MISO_M2/SAI4_LRCK_M0/PDM1_CLK0_M1/FlexBUS1_D14_M1/CAN0_RX_M2	GPIO4_A6_d	3.3V
D3	GND	Ground		0V
D33	RECOVERY_SARADC_VIN1	RECOVERY MODE/ADC_IN1(PU10K)		1.8V
D34	VDD_CORE_5V	System Power Input		3.4V-5.5V
D35	VDD_CORE_5V	System Power Input		3.4V-5.5V
E1	GND	Ground		0V
E2	LCDC_D1/EBC_SDDO1/DSMC_CSN3	I3C1_SDA_M2/UART2_RTS_M2/SPI4_CSN1_M1/SAI2_SDI_M2/FLEXBUS0_D12/FLEXBUS0_CS_M3/FLEXBUS1_D15_M0	GPIO3_D2_d /PWM2_CH4_M3	3.3V
E3	TYPEC_DPTX_AUX_PUPDCTL2	I2C4_SCL_M1/UART6_TX_M0/SPI3_MOSI_M2/SAI4_SCLK_M0/PDM1_SDI3_M1/FlexBUS1_D13_M1/CAN0_TX_M2	GPIO4_A4_d	3.3V
E33	32KOUT_RTC_1V8	RTC_CLK 32.768KHz output	GPIO0_A2_d(Note 1)	1.8V
E34	GND	Ground		0V
E35	PWRON_L	Power Key input		3.4V-5.5V
F1	TYPEC_DPTX_AUX_PUPDCTL1	AUPLL_CLKIN_M2/SAI1/4_MCLK_M0	GPIO4_A2_d /PWM2_CH5_M0	3.3V
F2	LCDC_VSYNC/EBC_SDCLK/DSMC_CLKN	UART5_CTS_M0/SPI3_MOSI_M1/SAI1_SDI3_M1/FLEXBUS1_CLK/PWM2_CH6_M3	GPIO3_D6_d	3.3V
F3	LCDC_D3/EBC_SDDO3/DSMC_DATA1	UART8_CTS_M0/SPI1_CSN0_M2/SAI1_MCLK_M1/FLEXBUS1_D3	GPIO3_D0_d /PWM2_CH3_M3	3.3V
F33	VCC_RTC	RTC Power input		1.8~3.3V
F34	SDMMC0_DET_L_1V8		GPIO0_A7_u	1.8V
F35	WIFI_REG_ON_H_1V8	I2C8_SCL_M1/UART2_TX_M0/PDM0_SDI0_M2/SATA_CPPOD	GPIO1_C6_d	1.8V
G1	LCDC_D4/EBC_SDDO4/DSMC_DATA2	UART8_RTS_M0/SPI1_CLK_M2/SAI1_SCLK_M1/FLEXBUS1_D4	GPIO3_C7_d	3.3V

Pin	Signal	Description or functions	GPIO serial	IO Voltage
G2	LCDC_D0/EBC_SDDO0/DSMC_CSN0	I3C1_SCL_M2/UART2_CTS_M2/SAI2_SDO_M2/FLEXBUS1_D2	GPIO3_D3_d /PWM2_CH5_M3	3.3V
G3	GND	Ground		0V
G33	HOST_WAKE_BT_H_1V8	SPDIF_TX1_M2/SPI2_CLK_M1/PDM0_CLK1_M2/CLK1_32K_OUT/SATA_MPSWIT	GPIO1_D5_d	1.8V
G34	BT_REG_ON_H_1V8	I2C8_SDA_M1/UART2_RX_M0/PDM0_SDI1_M2/SATA_CPDET	GPIO1_C7_d	1.8V
G35	MIPI_DPHY_CSI3_RX_D0N			0.5V
H1	GND	Ground		0V
H2	LCDC_D6/EBC_SDDO6/DSMC_DATA4	UART8_RX_M0/SPI1_MISO_M2/SAI1_SDO0_M1/FLEXBUS1_D6	GPIO3_C5_d /PWM2_CH2_M3	3.3V
H3	LCDC_DEN/EBC_SDLE/DSMC_DATA0	I2C3_SCL_M2/UART5_RX_M0/SPI3_CLK_M1/SAI1_SDI1_M1/FLEXBUS1_D1	GPIO3_D4_d	3.3V
H33	MIPI_DPHY_CSI3_RX_D1P			0.5V
H34	MIPI_DPHY_CSI3_RX_D1N			0.5V
H35	MIPI_DPHY_CSI3_RX_D0P			0.5V
J1	LCDC_D7/EBC_SDDO7/DSMC_DATA5	I2C5_SCL_M3/UART11_TX_M0/SPI2_CSN0_M2/SAI1_SDO0_M1/FLEXBUS1_D7/CAN0_TX_M3	GPIO3_C4_d	3.3V
J2	LCDC_D11/EBC_SDDO11/DSMC_DATA7	I2C4_SCL_M3/UART2_TX_M2/UART3_RTS_M1/SAI1_SDO3_M1/FLEXBUS1_D9	GPIO3_C0_d	3.3V
J3	LCDC_HSYNC/EBC_GDCLK/DSMC_CLKP	I2C3_SDA_M2/UART5_TX_M0/SPI3_MISO_M1/SAI1_SDI2_M1/FLEXBUS1_D0	GPIO3_D5_d	3.3V
J16	GND	Ground		0V
J17	GND	Ground		0V
J18	GND	Ground		0V
J19	GND	Ground		0V
J20	GND	Ground		0V
J21	GND	Ground		0V
J33	MIPI_DPHY_CSI3_RX_CLKN			0.5V

Pin	Signal	Description or functions	GPIO serial	IO Voltage
J34	VCC_3V3_S3	3.3V GPIO Power output	Max 500mA	3.3V
J35	MIPI_DPHY_CSI3_RX_D2N			0.5V
K1	GND	Ground		0V
K2	LCDC_D10/EBC_SDDO10/DSMC_DATA6	I2C5_SCL_M3/UART11_RX_M0/SPI2_MISO_M2/SAI1_SDO2_M1/FLEXBUS1_D8/CAN0_RX_M3	GPIO3_C1_d	3.3V
K3	PCIE1_PERSTn	SPI4_MISO_M2/PDM1_SDI1_M1/SAI1_SDI1_M0/SAI1_SDO3_M0/FlexBUS1_D15_M1	GPIO4_B2_d /MIPI_TE_M0	3.3V
K15	GND	Ground		0V
K16	GND	Ground		0V
K17	GND	Ground		0V
K18	GND	Ground		0V
K19	GND	Ground		0V
K20	GND	Ground		0V
K21	GND	Ground		0V
K33	MIPI_DPHY_CSI3_RX_CLKP			0.5V
K34	MIPI_DPHY_CSI3_RX_D3N			0.5V
K35	MIPI_DPHY_CSI3_RX_D2P			0.5V
L2	LCDC_D12/EBC_SDDO12/DSMC_DQS0	I2C4_SDA_M3/UART2_RX_M2/UART3_CTS_M1/SAI1_SDO0_M1/FLEXBUS1_D10/FLEXBUS1_CSN_M0	GPIO3_B7_d	3.3V
L3	GND	Ground		0V
L15	GND	Ground		0V
L16	GND	Ground		0V
L17	GND	Ground		0V
L18	GND	Ground		0V
L19	GND	Ground		0V
L20	GND	Ground		0V
L21	GND	Ground		0V
L33	MIPI_DPHY_CSI4_RX_CLKN			0.5V
L34	MIPI_DPHY_CSI3_RX_D3P			0.5V
L35	GND	Ground		0V
M15	GND	Ground		0V

Pin	Signal	Description or functions	GPIO serial	IO Voltage
M16	GND	Ground		0V
M17	GND	Ground		0V
M18	GND	Ground		0V
M19	GND	Ground		0V
M20	GND	Ground		0V
M21	GND	Ground		0V
M33	MIPI_DPHY_CSI4_RX_CLKP			0.5V
M34	PCIE1_RXP			0.5V
M35	PCIE1_RXN			0.5V
N2	PCIE1_PWREN_H	I2C2_SCL_M2/UART5_RTS_M1/SPI3_CS0_M2/SAI1_SCLK_M0/FlexBUS1_CS_M4	GPIO4_A3_d /PWM2_CH4_M1	3.3V
N3	IRC_AIN	UART2_RTS_M1/UART6_RTS_M0/UART5_TX_M1/SPI4_CLK_M2/PDM1_CLK1_M1/SAI1_SDI3_M0/SAI1_SDO1_M0/FlexBUS1_D13_M1	GPIO4_B1_d	3.3V
N15	GND	Ground		0V
N16	GND	Ground		0V
N17	GND	Ground		0V
N18	GND	Ground		0V
N19	GND	Ground		0V
N20	GND	Ground		0V
N21	GND	Ground		0V
N33	PCIE1_TXP			0.5V
N34	PCIE1_TXN			0.5V
N35	PCIE0_TXP			0.5V
P1	DSMC_INT2/GPIO4_A1_d	I2C7_SDA_M2/UART3_RX_M1/SAI4_SDO_M1/FLEXBUS0_CSN_M1/D14_M0/FLEXBUS1_D13_M0/SPDIF_TX0_M1/CAM_CLK2_M0/VO_POST_EMPTY	GPIO4_A1_d	3.3V
P2	DSMC_INT0/GPIO4_A0_d	I2C7_SCL_M2/UART3_TX_M1/SAI4_LRCK_M1/FLEXBUS0_D13_M0/FLEXBUS1_CSN_M3/D14_M0/SPDIF_RX0_M1/CAM_CLK1_M0/MIPI_TE_M2	GPIO4_A0_d	3.3V
P3	GND	Ground		0V
P15	GND	Ground		0V

Pin	Signal	Description or functions	GPIO serial	IO Voltage
P16	GND	Ground		0V
P17	GND	Ground		0V
P18	GND	Ground		0V
P19	GND	Ground		0V
P20	GND	Ground		0V
P21	GND	Ground		0V
P33	PCIE1_REFCLKP			0.5V
P34	PCIE1_REFCLKN			0.5V
P35	PCIE0_TXN			0.5V
R1	I2C3_SCL_M0	PCIE0_CLKREQ_M2/IUART2_TX_M1/SPDIF_TX0_M0/FlexBUS0_D15_M1/CAN1_TX_M2	GPIO4_B5_d	3.3V
R2	I2C3_SDA_M0	PCIE0_WAKE_M2/IUART2_RX_M1/SPDIF_RX0_M0/FlexBUS0_CSN_M4/CAN1_RX_M2	GPIO4_B4_d	3.3V
R3	PWM2_CH5_M1_FAN	I2C3_SDA_M3/UART6_RX_M3/SPI4_MOSI_M0/SAI4_SDO_M2/VP0_SYNC_OUT/ISP_FLASH_TRIGOUT_M1	GPIO4_C5_d SATA1_ACTLED_M1 /PCIE0_WAKE_M3	3.3V
R15	GND	Ground		0V
R16	GND	Ground		0V
R17	GND	Ground		0V
R18	GND	Ground		0V
R19	GND	Ground		0V
R20	GND	Ground		0V
R21	GND	Ground		0V
R33	PCIE0_RXN			0.5V
R34	PCIE0_REFCLKP			0.5V
R35	PCIE0_REFCLKN			0.5V
T1	GND	Ground		0V
T2	HDMI_TX_CEC_M0	I2C7_SCL_M3/UART11_TX_M2/SPI4_CSn1_M0/SAI_MCLK_M2/DSM_ALP_M1	GPIO4_C0_d /PWM1_CH5_M1 /PCIE1_WAKE_M3	3.3V
T3	HDMI_TX_HPDIN_M0	I2C7_SDA_M3/UART11_RX_M2/EDP_HPD_M0/PCIE1_CLKREQ_M3/DSM_ALN_M1	GPIO4_C1_d /PWM0_CH1_M1	3.3V
T33	PCIE0_RXP			0.5V
T34	GND	Ground		0V
T35	BT_WAKE_HOST_H_1V8	I2C0_SDA_M0	GPIO0_B1_z	1.8V

Pin	Signal	Description or functions	GPIO serial	IO Voltage
U1	HDMI_TX_SCL	I2C2_SCL_M3/UART9_TX_M2/CAN0_TX_M1/DSM_ARP_M1	GPIO4_C2_d /PWM2_CH0_M1	3.3V
U2	HDMI_TX_SDA	I2C2_SDA_M3/UART9_RX_M2/CAN0_RX_M1/DSM_ARN_M1	GPIO4_C3_d /PWM2_CH1_M1	3.3V
U3	DP_HPDIN_M0	I2C3_SCL_M3/UART6_TX_M3/SPI4_CSn0_M0/SAI4_LRCK_M2/ISP_PRLIGHT_TRIG_M1	GPIO4_C4_d /PWM2_CH6_M1	3.3V
U33	RESET_L	GPIO0_A1_z connected	(PU10K)	1.8V
U34	WIFI_WAKE_HOST_H_1V8	I2C0_SCL_M0	GPIO0_B0_z	1.8V
U35	GPIO0_A5_d_1V8			1.8V
V1	PCIE0_PERSTn	I2C6_SDA_M3/SPI4_CLK_M0/SAI4_SCLK_M2/VP2_SYNC_OUT/CAN1_RX_M1	GPIO4_C7_d /PWM2_CH3_M1	3.3V
V2	PCIE0_CLKREQn_M3	I2C6_SCL_M3/SPI4_MISO_M0/SAI4_SDI_M2/VP1_SYNC_OUT/CAN1_TX_M1	GPIO4_C6_d /PWM2_CH2_M1 SATA0_ACTLED_M1	3.3V
V3	GND	Ground		0V
V33	I2C0_SCL_M1_TP	I3C0_SCL_M0/UART8_TX_M2	GPIO0_C1_d	3.3V
V34	UART0_RX_M0_DEBUG	For debug default	GPIO0_D5_u	3.3V
V35	UART0_TX_M0_DEBUG	For debug default	GPIO0_D4_u	3.3V
W1	GND	Ground		0V
W2	I2C7_SDA_M1/E0_MDC_M1_1V8	UART3_RX_M0/SPI3_MOSI_M0/SAI3_LRCK_M2/VI_CIF_VSYNC	GPIO3_A1_d /ETH0_MDC_M1	1.8V
W3	SAI2_SDI_M0_1V8	I3C0_SDA_M1/PWM1_CH4_M1	GPIO1_D3_d	1.8V
W33	I2C0_SDA_M1_TP	I3C0_SDA_M0/UART8_RX_M2	GPIO0_C2_d	3.3V
W34	LCD_BL_PWM1_CH1_M0	I2C1_SDA_M1/UART4_RX_M2/REFCLK2_OUT	GPIO0_B5_d	3.3V
W35	VCC_1V8_S3	1.8V GPIO Power output	Max 500mA	1.8V
Y1	I2C7_SCL_M1/E0_MDIO_M1_1V8	UART3_TX_M0/SPI3_CLK_M0/SAI3_SCLK_M2/VI_CIF_HREF	GPIO3_A0_d /ETH0_MDIO	1.8V
Y2	SAI2_LRCK_M0_1V8	I3C0_SCL_M1/PWM1_CH3_M1	GPIO1_D2_d	1.8V

Pin	Signal	Description or functions	GPIO serial	IO Voltage
Y3	N.C.			
Y33	USBCC_INT_L	SPI0_MISO_M0/PDM0_SDI1_M0/SAI0_SDO3/SDI1_M1	GPIO0_D1_d	3.3V
Y34	I2C2_SCL_M0	UART1_TX_M0/PWM1_CH4_M0	GPIO0_B7_d	3.3V
Y35	I2C2_SDA_M0	UART1_RX_M0/PWM1_CH3_M0	GPIO0_C0_d	3.3V
AA1	GND	Ground		0V
AA2	UART4_RX_M1_1V8	SPI2_MISO_M1/UART2_CTS_M0/PCIE1_BUTTONRST	GPIO1_C5_d	1.8V
AA3	GND	Ground		0V
AA4	SAI2_SDO_M0_1V8	UART10_TX_M1/SAI2_SDO_M0/FSPI1_D4_M1	GPIO1_D0_d	1.8V
AA5	USB2_OTG0_DP			0.5V
AA6	USB2_OTG1_DP			0.5V
AA7	DP_TX_AUXN			0.5V
AA8	DP_TX_AUXP			0.5V
AA9	GND	Ground		0V
AA10	USB3_OTG0_SSTX1P/DP_TX_D1P			0.5V
AA11	USB3_OTG0_SSTX1N/DP_TX_D1N			0.5V
AA13	LCD_PWREN_H	I2C3_SCL_M1/SPI0_CSn0_M0/SAI0_SCLK_M1	GPIO0_C6_d	3.3V
AA14	TP_RST_L	SPI0_MOSI_M0/PDM0_SDI0_M0/SAI0_SDI0_M1	GPIO0_D0_d	3.3V
AA15	GMAC1_INT	SPI0_CSN1_M0/PDM0_CLK1_M0/HDMI_TX_CEC_M1/PWM0_CH1_M0	GPIO0_C3_d	3.3V
AA16	GPIO0_C4_d	UART10_TX_M2/PDM0_CLK0_M0/SAI0_MCLK_M1	PWM0_CH0_M0	3.3V
AA17	GND	Ground		0V
AA18	MIPI_DPHY_DSI_TX_D1N			0.5V
AA19	MIPI_DPHY_DSI_TX_D2P			0.5V
AA20	MIPI_DPHY_CSI0_RX_D1N			0.5V
AA21	MIPI_DPHY_CSI0_RX_D1P			0.5V
AA22	MIPI_DPHY_CSI0_RX_CLKP			0.5V

Pin	Signal	Description or functions	GPIO serial	IO Voltage
AA23	MIPI_DPHY_CSI0_RX_D2P			0.5V
AA25	MIPI_DPHY_CSI0_RX_D3P			0.5V
AA26	GND	Ground		0V
AA27	HDMI_TX_D0P			0.5V
AA28	HDMI_TX_D1P			0.5V
AA29	MIPI_DPHY_CSI2_RX_CLKN			0.5V
AA30	MIPI_DPHY_CSI2_RX_CLKP			0.5V
AA31	MIPI_DPHY_CSI1_RX_D3P			0.5V
AA32	MIPI_DPHY_CSI1_RX_D0N			0.5V
AA33	MIPI_DPHY_CSI1_RX_D0P			0.5V
AA34	GPIO0_B4_d	I2C1_SCL_M1/UART4_TX_M2/REFCLK1_OUT	PWM1_CH0_M0	3.3V
AA35	GMAC1_RSTn	EDP_TX_HPDIN_M1/HDMI_TX_HPDIN_M1/SDMMC1_DETN_M2/SDMMC0_PWREN	GPIO0_B6_d /PWM1_CH2_M0	3.3V
AB1	SPDIF_RX1_M2_1V8	I2C5_SCL_M1/UART10_RTS_M1/PDM0_SDI3_M2/SPDIF_RX1_M2/SAI2_MCLK_M0/FSPI1_DQS_M1	GPIO1_D4_d	1.8V
AB2	UART4_RTSN_M1_1V8	SDMMC1_PWEN_M0/I2C6_SCL_M1/SPI2_CSN1_M1	GPIO1_C2_u /PWM1_CH2_M1	1.8V
AB3	UART4_CTSN_M1_1V8	SDMMC1_DET_M0/I2C6_SDA_M1/SPI2_CSN0_M1	GPIO1_C3_u	1.8V
AB4	SAI2_SCLK_M0_1V8	I3C0_SDA_PU_M1/UART10_RX_M1	GPIO1_D1_d	1.8V
AB5	USB2_OTG0_DM			0.5V
AB6	USB2_OTG1_DM			0.5V
AB7	GND	Ground		0V
AB8	USB3_OTG0_SSRX1P/DP_TX_D0P			0.5V
AB9	USB3_OTG0_SSRX2N/DP_TX_D2N			0.5V
AB10	USB3_OTG0_SSRX2P/DP_TX_D2P			0.5V
AB11	GND	Ground		0V

Pin	Signal	Description or functions	GPIO serial	IO Voltage
AB13	PCIE0_WAKEn_M0	I2C4_SCL_M0/UART1_CTS_M0/PDM0_SDI2_M0/SAI0_SDO2/SDI2_M1	GPIO0_D2_d /PWM1_CH5_M0	3.3V
AB14	GND	Ground		0V
AB15	PCIE0_PWREN_H	I2C3_SDA_M1/SPI0_CLK_M0/SAI0_LRCK_M1	GPIO0_C7_d	3.3V
AB16	GND	Ground		0V
AB17	MIPI_DPHY_DSI_TX_D0P			0.5V
AB18	MIPI_DPHY_DSI_TX_D1P			0.5V
AB19	MIPI_DPHY_DSI_TX_D2N			0.5V
AB20	MIPI_DPHY_DSI_TX_D3P			0.5V
AB21	MIPI_DPHY_CSI0_RX_D0P			0.5V
AB22	MIPI_DPHY_CSI0_RX_CLKN			0.5V
AB23	MIPI_DPHY_CSI0_RX_D2N			0.5V
AB25	MIPI_DPHY_CSI0_RX_D3N			0.5V
AB26	HDMI_TX_SBDP			0.5V
AB27	HDMI_TX_D0N			0.5V
AB28	HDMI_TX_D1N			0.5V
AB29	HDMI_TX_D2P			0.5V
AB30	GND	Ground		0V
AB31	MIPI_DPHY_CSI1_RX_D3N			0.5V
AB32	MIPI_DPHY_CSI1_RX_D2P			0.5V
AB33	MIPI_DPHY_CSI1_RX_D1P			0.5V
AB34	GND	Ground		0V
AB35	GND	Ground		0V
AC2	GND	Ground		0V
AC3	UART4_TX_M1_1V8	SPI2_MOSI_M1/UART2_RTS_M0/PCIE0_BUTTONRST	GPIO1_C4_d	1.8V
AC4	GND	Ground		0V
AC5	USB2_OTG0_VBUSDET	USB0 VBUS Input		3.3V

Pin	Signal	Description or functions	GPIO serial	IO Voltage
AC6	GND	Ground		0V
AC7	USB2_OTG0_ID	USB0 ID Input		1.8V
AC8	USB3_OTG0_SSRX1N/DP_TX_D0N			0.5V
AC9	USB3_OTG0_SSTX2P/DP_TX_D3P			0.5V
AC10	USB3_OTG0_SSTX2N/DP_TX_D3N			0.5V
AC14	TP_INT_L	I3C0_SDA_PU_M0/UART10_RX_M2/SAI0_SDO0_M1/DP_HPD_M1	GPIO0_C5_d	3.3V
AC15	PCIE1_WAKEn_M0	I2C4_SDA_M0/UART1_RTS_M0/PDM0_SDI3_M0/SAI0_SDO1/SDI3_M1	GPIO0_D3_d /PWM2_CH0_M0	3.3V
AC16	GND	Ground		0V
AC17	MIPI_DPHY_DSI_TX_D0N			0.5V
AC18	MIPI_DPHY_DSI_TX_CLKN			0.5V
AC19	MIPI_DPHY_DSI_TX_CLKP			0.5V
AC20	MIPI_DPHY_DSI_TX_D3N			0.5V
AC21	MIPI_DPHY_CSI0_RX_D0N			0.5V
AC22	GND	Ground		0V
AC26	HDMI_TX_SBDN			0.5V
AC27	HDMI_TX_D3N			0.5V
AC28	HDMI_TX_D3P			0.5V
AC29	HDMI_TX_D2N			0.5V
AC30	MIPI_DPHY_CSI1_RX_CLKN			0.5V
AC31	MIPI_DPHY_CSI1_RX_CLKP			0.5V
AC32	MIPI_DPHY_CSI1_RX_D2N			0.5V
AC33	MIPI_DPHY_CSI1_RX_D1N			0.5V
AC34	PLDO2_S0	PLDO2 Power output	Max 300mA	0.6~3.3V

Note:
1. If N.S. RTC IC，can use for GPIO.

1.7 Development Kit (Idea3576)

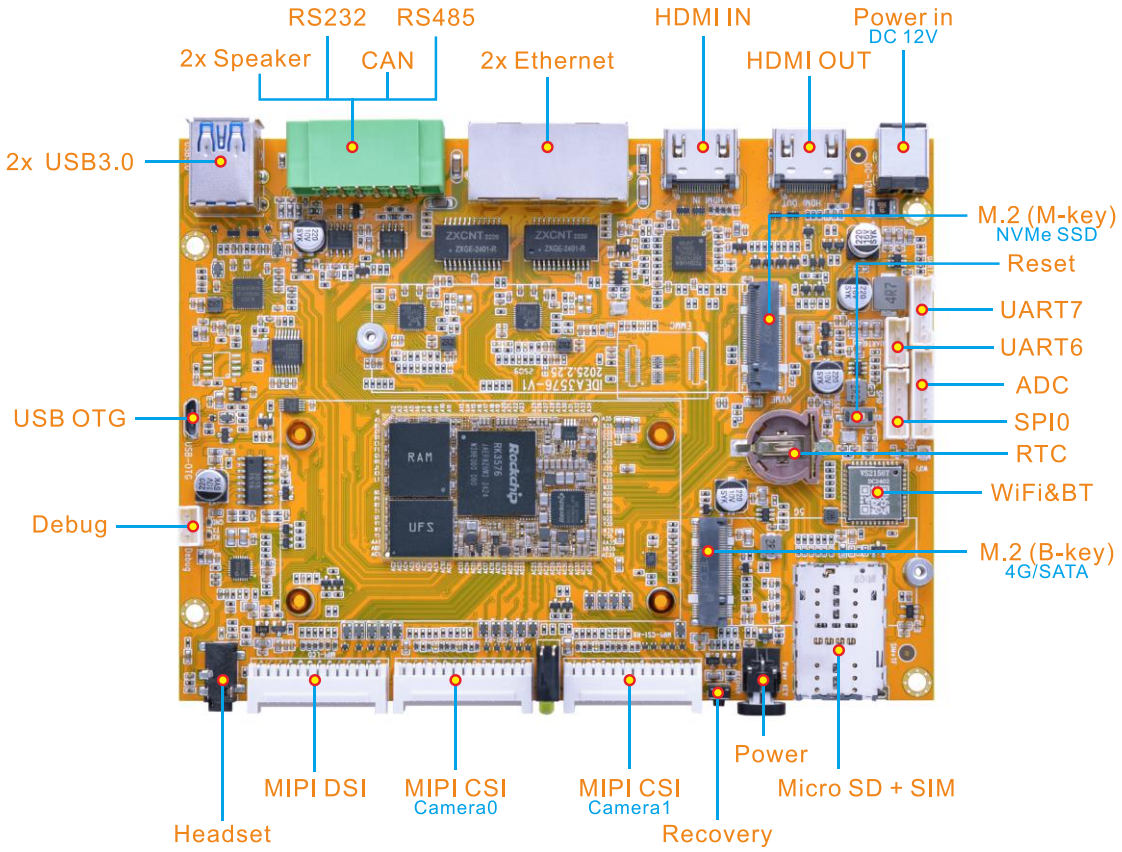

1.8 Demo Box Case (Idea3576)

2 Hardware Design Guide

2.1 Peripheral Circuit Reference

2.1.1 External Power

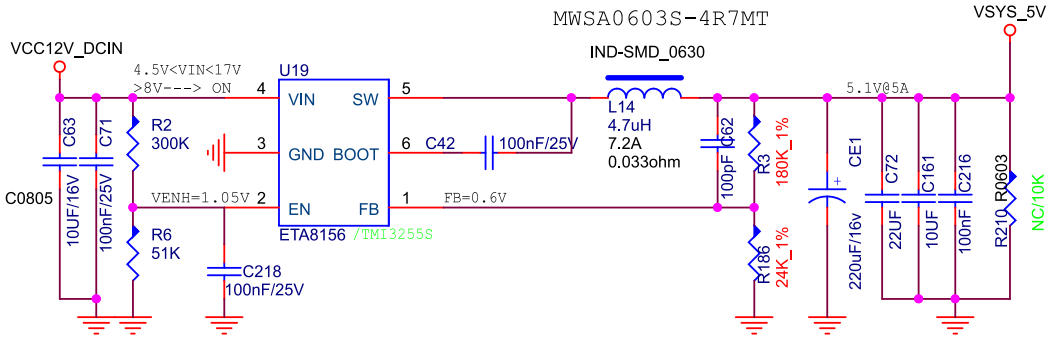

2.1.2 Debug Circuit

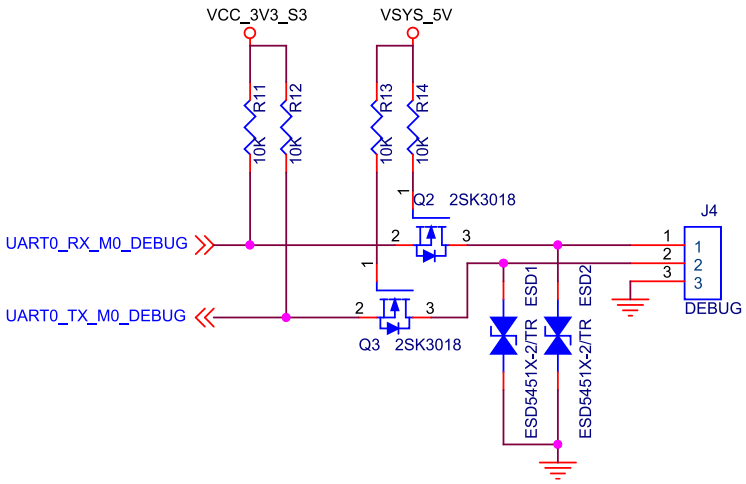

2.1.3 HDMI TX Circuit

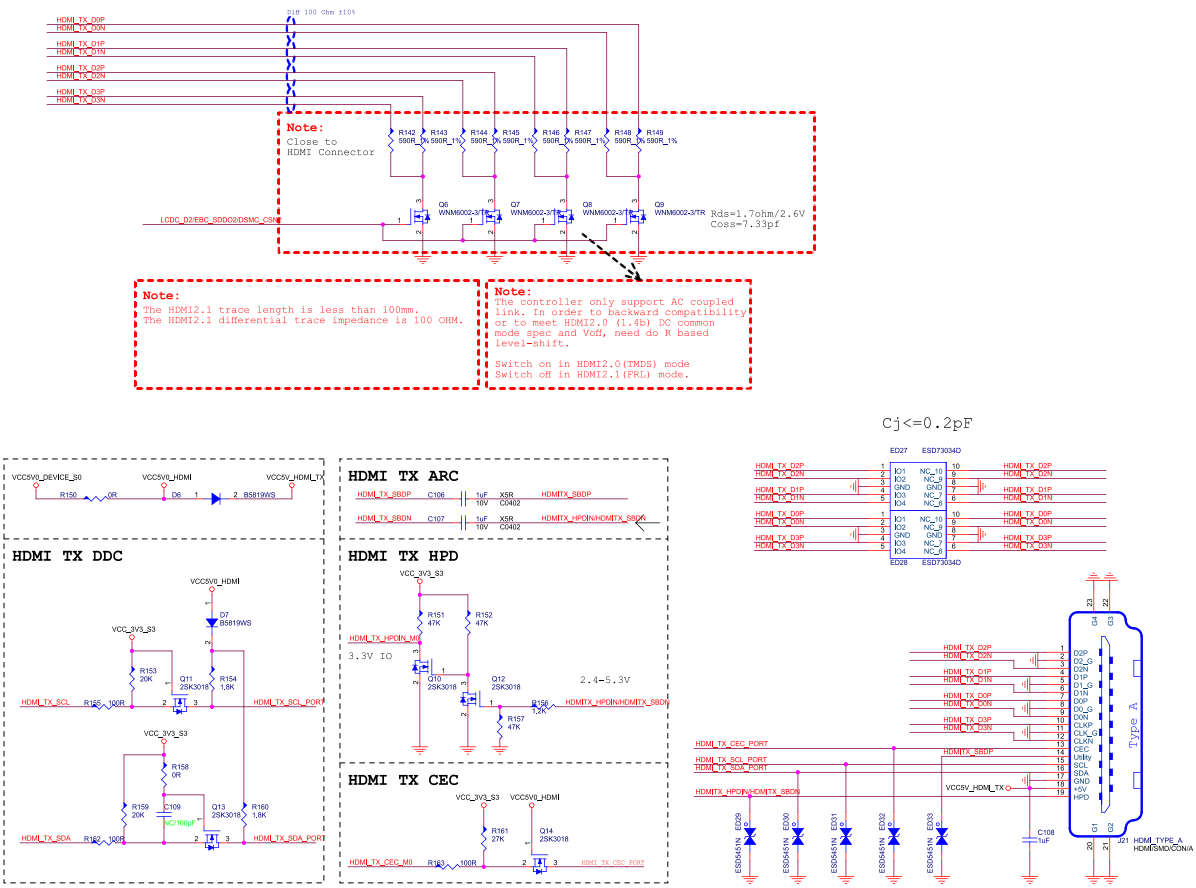

2.2 PCB Footprint

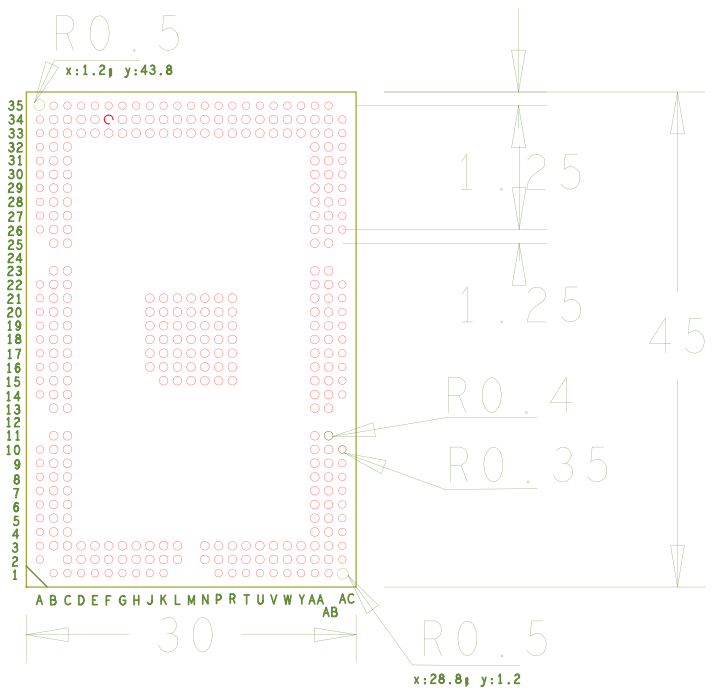

3 Product Electrical Characteristics

3.1 Dissipation and Temperature

Symbol	Parameter		Min	Typ	Max	Unit
VCC_SYS	System Voltage		3.4V	4	5.5	V
Isys_in	VCC_SYS input Current			1720		mA
VCC_RTC	RTC Voltage		1.8	3	3.4	V
Iirtc	RTC input Current			5	8	uA
I3v3_out	VCC_3V3 output Current				500	mA
I1v8_out	VCC_1V8 output Current				500	mA
PLDO2_S0	PLDO2 Voltage		0.6	1.8	3.3	V
Ipo2_out	PLDO2 output Current				300	mA
Ta	Operating Temperature	Commercial	0	NA	70	°C
		Industrial	-40	NA	85	°C
Tstg	Storage Temperature		-40		85	°C

3.2 Reliability of Test

High Temperature Operating Test		
Contents	Operating 8h in high temperature	55°C±2°C
Result	TBD	

Operating Life Test		
Contents	Operating in room	120h
Result	TBD	