CM3576 Reference User Manual

V1.202610

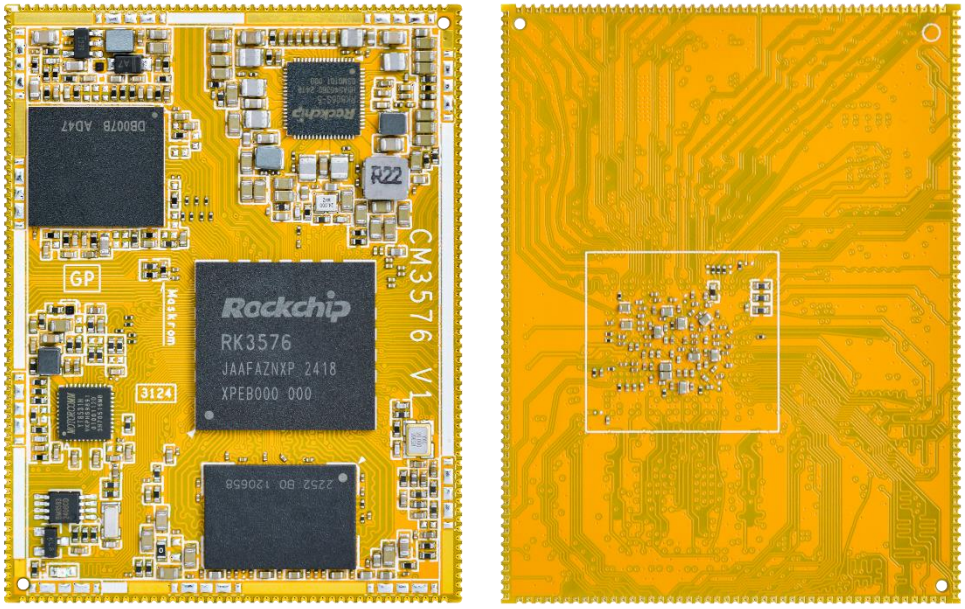

Boardcon Embedded Design

www.armdesigner.com

1. Introduction

1.1. About this Manual

This manual is intended to provide the user with an overview of the board and benefits, complete features specifications, and set up procedures. It contains important safety information as well.

1.2. Feedback and Update to this Manual

To help our customers make the most of our products, we are continually making additional and updated resources available on the Boardcon website (www.boardcon.com, www.armdesigner.com).
These include manuals, application notes, programming examples, and updated software and hardware. Check in periodically to see what's new!
When we are prioritizing work on these updated resources, feedback from customers is the number one influence, If you have questions, comments, or concerns about your product or project, please no hesitate to contact us at support@armdesigner.com.

1.3. Limited Warranty

Boardcon warrants this product to be free of defects in material and workmanship for a period of one year from date of buy. During this warranty period Boardcon will repair or replace the defective unit in accordance with the following process:
A copy of the original invoice must be included when returning the defective unit to Boardcon. This limited warranty does not cover damages resulting from lighting or other power surges, misuse, abuse, abnormal conditions of operation, or attempts to alter or modify the function of the product.
This warranty is limited to the repair or replacement of the defective unit. In no event shall Boardcon be liable or responsible for any loss or damages, including but not limited to any lost profits, incidental or consequential damages, loss of business, or anticipatory profits arising from the use or inability to use this product.
Repairs make after the expiration of the warranty period are subject to a repair charge and the cost of return shipping. Please contact Boardcon to arrange for any repair service and to obtain repair charge information.

Content

1 CM3576 Introduction 3
1.1 Summary 3
1.2 Features 3
1.3 CM3576 Block Diagram 5
1.4 CM3576 Specifications 6
1.5 CM3576 PCB Dimension 7
1.6 CM3576 Pin Definition 7
1.7 Development Kit (EM3576) 20
2 Hardware Design Guide 20
2.1 Peripheral Circuit Reference 20
2.2 Mother Board Length Offset 22
2.3 PCB Footprint (Top View) 22
3 Product Electrical Characteristics 23
3.1 Dissipation and Temperature 23
3.2 Reliability of Test 23
3.3 Certification 24

1 CM3576 Introduction

1.1 Summary

The CM3576 system-on-module is equipped with Rockchip's RK3576. It has a quad-core Cortex-A72 and a quad-core Cortex-A53 processor, embedded Mali-G52 MC3 GPU and 6.0 TOPs NPU.
It is designed specifically for the high-performance devices such as 4K video surveillance system, AI Edge calculation devices, intelligent interactive devices, personal computers and robots. The high-performance multimedia processing and acceleration engine solution can help customers to introduce new technologies more quickly and enhance the overall solution efficiency.

1.2 Features

- **Microprocessor**
  - Quad-core Cortex-A72 up to 2.2GHz
  - Quad-core Cortex-A53 up to 1.8GHz
  - 48KB I-cache 32KB D-cache and 1MB L2 for A72 each core, 32KB I-cache 32KB D-cache and 512KB L2 for A53 each core
  - 6.0 TOPS Neural Process Unit
  - Mali-G52 MC3 up to 1.0GHz
  - Single-core Cortex-M0 for user application
- **Memory Organization**
  - LPDDR4 or LPDDR4X RAM up to 8GB
  - eMMC up to 256GB
  - Support UFS2.0 up to 512GB
  - Support FSPI Flash
- **Boot ROM**
  - Supports system code download through USB OTG
- **Secure system**
  - Embedded two cipher engine
  - Support key ladder to guarantee key secure
  - Support secure OS and data scrambling
  - Support OTP
- **Video Decoder/Encoder**
  - H.265/VP9/AVS2/AV1 decoding up to 8K@30fps or 4K@120fps
  - H.264/AVC decoding up to 4K@30fps
  - H.264/H.265 encoding up to 4K@60fps
  - Picture size up to 65520 x 65520
- **Display Subsystem**
  - **Video Output**
    - Supports HDMI 2.1 TX with ARC, up to 4K@120fps
      or EDP TX interface up to 4K@60Hz

HDMI 2.1 support FRL mode
- Supports 4 lanes MIPI DSI up to 4K@60Hz
- Supports PD1.4a interface up to 4K@60fps
- Supports RGB 24bit output
- Supports E-ink screen interface

- **Video/Image Input**
  - Supports 3-CH MIPI 4lanes CSI interfaces
    or 4-CH MIPI 2lanes + 1-CH 4lanes CSI interfaces
  - Supports DVP 8-bit input

- **Audio**
  - Five I2S/PCM interfaces
  - Support 8-ch TX/RX on I2S0/1
  - Support Mic array Up to 8ch PDM/TDM interface
  - Support 2-ch SPDIF output
  - Support 2-ch SPDIF input
  - Support voice activity detection
- **USB / PCIE/SATA3**
  - One Type-C or DP interfaces
  - One USB3.0 Host or PCIE2.1x1 or SATA3 interface.
  - One PCIE2.1x1 or SATA3 interface.
  - SATA3 support five device each port via PM switch
- **Ethernet**
  - On board RTL8211F
- **I2C**
  - Up to 9-CH I2C
  - Support standard mode and fast mode(up to 400kbit/s)
- **I3C**
  - Up to 2-CH I3C
  - Support HDR mode(up to 30Mbps)
  - I2C compatible
- **SDIO / SDMMC**
  - Support SDIO 3.0 protocol
  - Support SD3.0 card
- **SPI**
  - Up to 5-ch SPI controllers
  - Full-duplex synchronous serial interface
- **UART**
  - Support up to 12 UARTs
  - UART2 with 2 wires for debug
  - Embedded two 64byte FIFO
- **CAN**
  - Support up to two CAN controller
  - Support CAN FD protocol
- **ADC**

- Up to Two ADC channels
- 12-bit resolution up to 1MS/s sampling rate
- Voltage input range between 0V to 1.8V

- **PWM**
  - Up to 4 PWMs with interrupt-based operation
  - Support 32bit time/counter facility
- **Power unit**
  - PMU RK806 on board
  - 3.4 ~ 5.5V main power input
  - 1.8V and 3.3V max 500mA output
  - Very low RTC consume current, less 5uA at 3V button Cell.

1.3 CM3576 Block Diagram

1.3.1 RK3576 Block Diagram

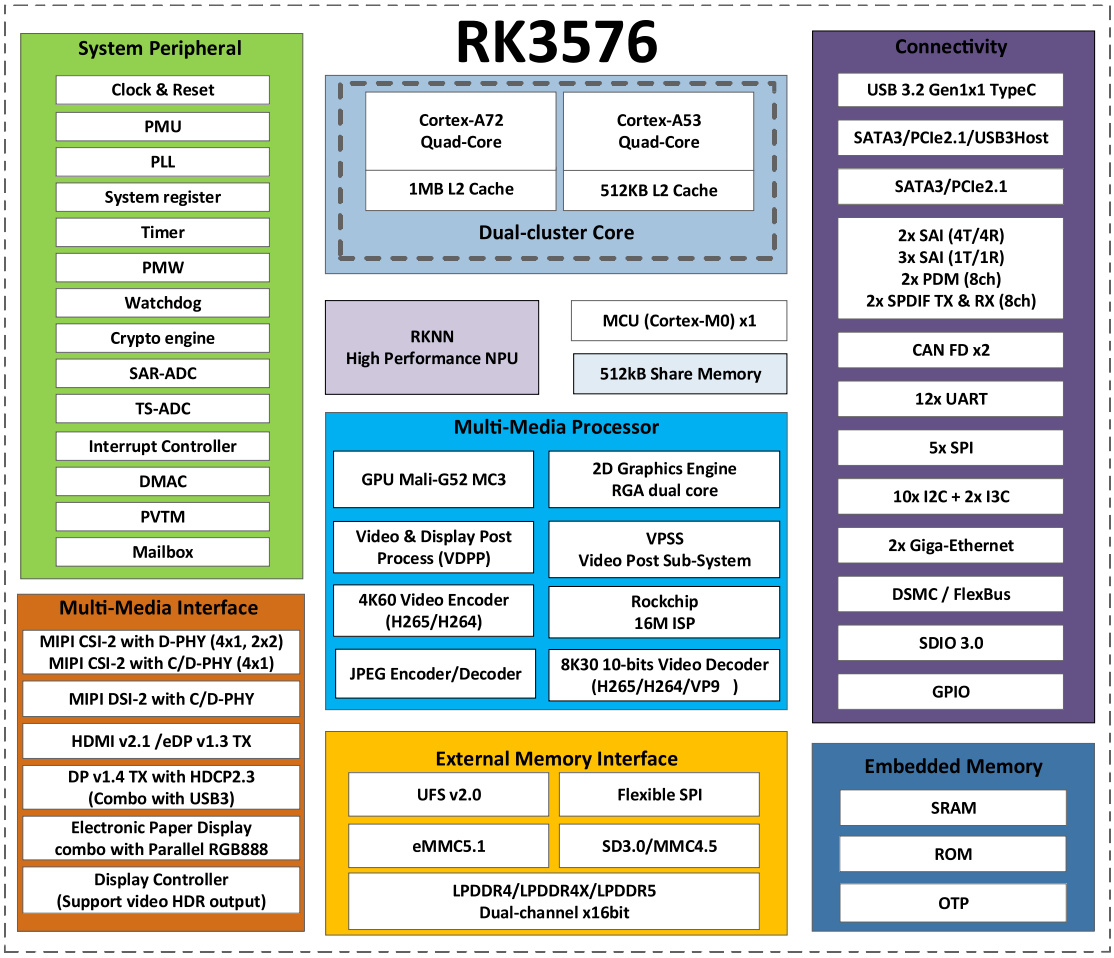

1.3.2 Development board (EM3576) Block Diagram

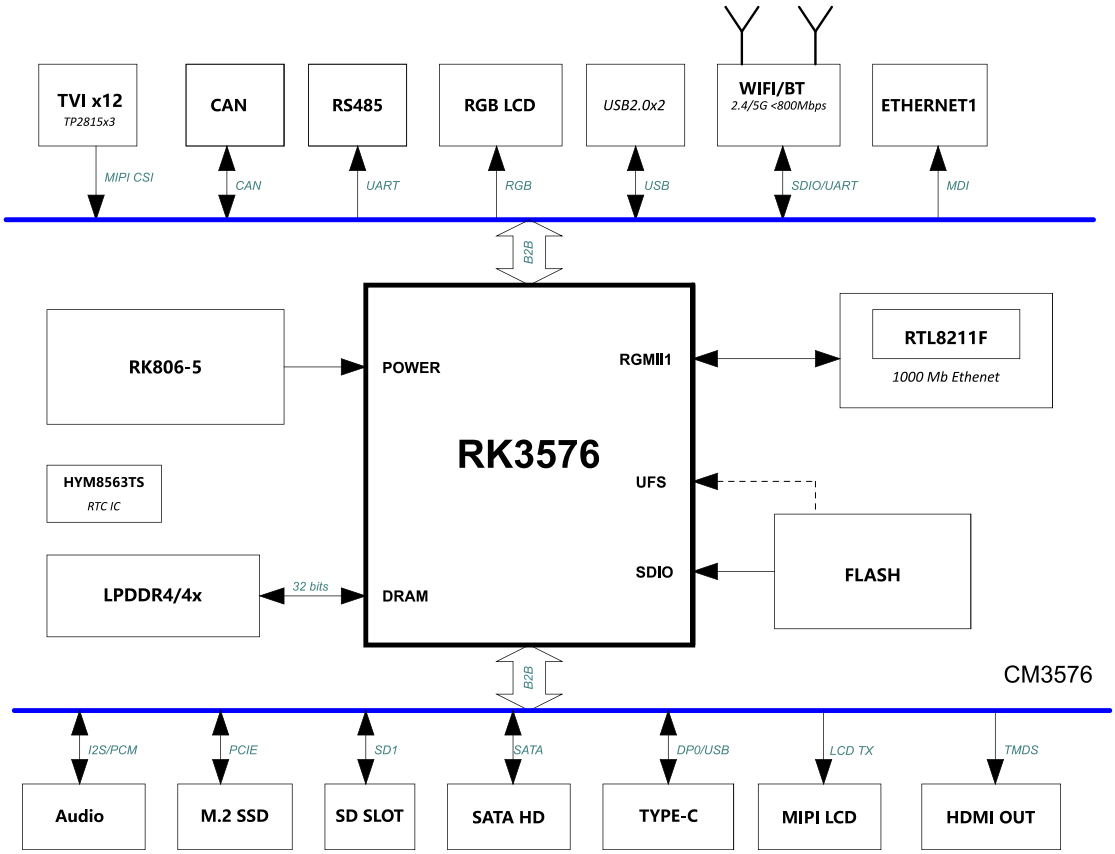

1.4 CM3576 Specifications

Feature	Specifications
CPU	Quad-core Cortex-A72 and quad-core Cortex-A53
DDR	4GB LPDDR4/x (up to 8GB)
eMMC FLASH	32GB (up to 256GB)
UFS FLASH	option
Power	DC 3.4 ~ 5.5V
EDP/MIPI DSI	1-CH EDP, 1-CH MIPI DSI
I2S	5-CH
MIPI CSI	3-CH 4-Lane or 4-CH 2-Lane + 1-CH 4-Lan CSI (up to 5 CSI Cameras)
SATA	2-CH
HDMI output	1-CH (EDP option)
DP output	1-CH
RGB output	1-CH 24bit
EBC output	1-CH (option)
Flex Bus	option

Feature	Specifications
CAN	2-CH
USB	1-CH Type-C and 1-CH USB Host3.0
Ethernet	1-ch 1GB PHY
SDMMC	2-CH
SPDIF TX	2-CH
SPDIF RX	2-CH
I2C	9-CH
I3C	2-CH
SPI	5-CH
CAN	2-CH
UART	11-CH, 1-CH(DEBUG)
PWM	4-CH
ADC IN	2-CH
Board Dimension	57.5 x 44mm

1.5 CM3576 PCB Dimension

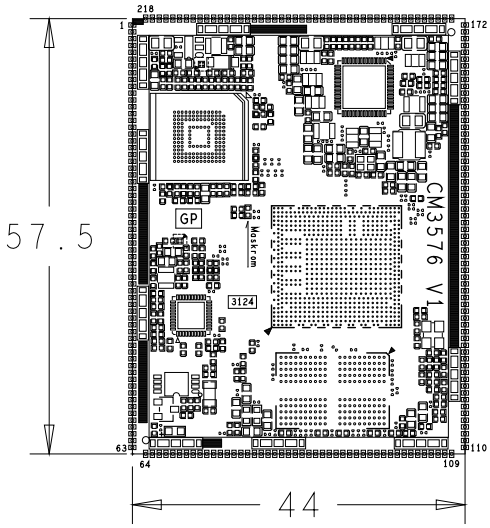

1.6 CM3576 Pin Definition

Pin	Signal	Description or functions	GPIO serial	IO Voltage
1	VCC_SYS	System Power Input		3.4V-5.5V
2	VCC_SYS	System Power Input		3.4V-5.5V
3	VCC_SYS	System Power Input		3.4V-5.5V
4	PWRON_L	Power Key input		3.4V-5.5V
5	VCC_3V3_S3	3.3V GPIO Power output	Max 500mA	3.3V

Pin	Signal	Description or functions	GPIO serial	IO Voltage
6	UART0_TX_M0	For debug default	GPIO0_D4_u	3.3V
7	UART0_RX_M0	For debug default	GPIO0_D5_u	3.3V
8	GND	Ground		0V
9	RESET_L	GPIO0_A1_z connected(PU)		1.8V
10	SDMMC0_DET_L_1V8	(PU100K)	GPIO0_A7_u	1.8V
11	WIFI_WAKE_HOST_H_1V8	I2C0_SCL_M0	GPIO0_B0_z	1.8V
12	BT_WAKE_HOST_H_1V8	I2C0_SDA_M0	GPIO0_B1_z	1.8V
13	HOST_WAKE_BT_H_1V8	SPDIF_TX1_M2/SPI2_CLK_M1/PDM0_CLK1_M2/CLK1_32K_OUT/SATA_MPSWIT	GPIO1_D5_d	1.8V
14	SAI2_SCLK_M0_1V8	I3C0_SDA_PU_M1/UART10_RX_M1	GPIO1_D1_d	1.8V
15	SAI2_SDO_M0_1V8	UART10_TX_M1	GPIO1_D0_d	1.8V
16	SAI2_SDI_M0_1V8	I3C0_SDA_M1/PWM1_CH4_M1	GPIO1_D3_d	1.8V
17	SAI2_LRCK_M0_1V8	I3C0_SCL_M1/PWM1_CH3_M1	GPIO1_D2_d	1.8V
18	WIFI_REG_ON_H_1V8	I2C8_SCL_M1/UART2_TX_M0/PDM0_SDI0_M2/SATA_CPPOD	GPIO1_C6_d	1.8V
19	BT_REG_ON_H_1V8	I2C8_SDA_M1/UART2_RX_M0/PDM0_SDI1_M2/SATA_CPDET	GPIO1_C7_d	1.8V
20	UART4_CTSN_M1_1V8	SDMMC1_DET_M0/I2C6_SDA_M1/SPI2_CSN0_M1	GPIO1_C3_u	1.8V
21	UART4_RTSN_M1_1V8	SDMMC1_PWEN_M0/I2C6_SCL_M1/SPI2_CSN1_M1/PWM1_CH2_M1	GPIO1_C2_u	1.8V
22	UART4_TX_M1_1V8	SPI2_MOSI_M1/UART2_RTS_M0/PCIE0_BUTTONRST	GPIO1_C4_d	1.8V
23	UART4_RX_M1_1V8	SPI2_MISO_M1/UART2_CTS_M0/PCIE1_BUTTONRST	GPIO1_C5_d	1.8V
24	SDMMC1_D1_M0_1V8	I2C9_SCL_M1/SPI1_MOSI_M0/PCIE1_WAKE_M1/SAI3_LRCK_M1/PWM1_CH1_M1	GPIO1_B5_d	1.8V
25	SDMMC1_D0_M0_1V8	I2C9_SDA_M1/SPI1_CLK_M0/PCIE1_CLKREQ_M1/SAI3_SCLK_M1/PWM1_CH0_M1	GPIO1_B4_d	1.8V

Pin	Signal	Description or functions	GPIO serial	IO Voltage
26	SDMMC1_D2_M0_1V8	UART3_CTS_M2/SPI1_MISO_M0/PCIE0_CLKREQ_M1/SAI3_SDO_M1	GPIO1_B6_d	1.8V
27	SDMMC1_D3_M0_1V8	UART3_RTS_M2/SPI1_CSN0_M0/PCIE0_WAKE_M1/SAI3_SDI_M1	GPIO1_B7_d	1.8V
28	SDMMC1_CMD_M0_1V8	UART3_TX_M2/SPI1_CSN1_M0/PDM0_SDI2_M2/PWM0_CH0_M1	GPIO1_C0_d	1.8V
29	SDMMC1_CLK_M0_1V8	UART3_RX_M2/PDM0_CLK0_M2/SAI3_MCLK_M1	GPIO1_C1_d	1.8V
30	GND	Ground		0V
31	RECOVERY_SARADC_VIN1	RECOVERY MODE/ADC_IN1(PU10K)		1.8V
32	SARADC_VIN2	ADC_IN2		1.8V
33	GND	Ground		0V
34	SDMMC0_CLK	I3C1_SDA_PU_M1/I2C5_SCL_M0/UART5_TX_M2/SPI0_CLK_M1/SAI3_SCLK_M3	GPIO2_A5_d/ FSPI1_CLK_M0	3.3V
35	SDMMC0_D1	DSM_ALN_M0/I2C8_SDA_M0/UART0_TX_M1/UART7_TX_M2/SPI0_MISO_M1/CAN0_TX_M0/SAI3_MCLK_M3	GPIO2_A1_d/ PWM2_CH3_M0/ FSPI1_D1_M0	3.3V
36	SDMMC0_D0	DSM_ALP_M0/I2C8_SCL_M0/UART0_RX_M1/UART7_RX_M2/SPI0_MOSI_M1/CAN0_RX_M0	GPIO2_A0_d/ PWM2_CH2_M0/ FSPI1_D0_M0	3.3V
37	SDMMC0_CMD	I2C5_SDA_M0/UART5_RX_M2/SPI0_CSN0_M1/SAI3_SDO_M3	GPIO2_A4_d/ PWM2_CH4_M0/ FSPI1_CSN0_M0	3.3V
38	SDMMC0_D3	I3C1_SDA_M1/DSM_ARN_M0/UART5_CTSN_M2/SAI3_SDI_M3/CAN1_TX_M0	GPIO2_A3_d/ FSPI1_D3_M0/ JTAG_TMS_M0	3.3V
39	SDMMC0_D2	I3C1_SCL_M1/DSM_ARP_M0/UART5_RTSN_M2/SAI3_LRCK_M3/CAN1_RX_M0	GPIO2_A2_d/ FSPI1_D2_M0/ JTAG_TCK_M0	3.3V
40	LCDC_DEN/EBC_SDLE/DSMC_DATA0	I2C3_SCL_M2/UART5_RX_M0/SPI3_CLK_M1/SAI1_SDI1_M1/FLEXBUS1_D1	GPIO3_D4_d	3.3V
41	LCDC_VSYNC/EBC_SDCLK/DSMC_CLKN	UART5_CTS_M0/SPI3_MOSI_M1/SAI1_SDI3_M1/FLEXBUS1_CLK/PWM2_CH6_M3	GPIO3_D6_d	3.3V

Pin	Signal	Description or functions	GPIO serial	IO Voltage
42	LCDC_HSYNC/EBC_GDCLK/DSMC_CLKP	I2C3_SDA_M2/UART5_TX_M0/SPI3_MISO_M1/SAI1_SDI2_M1/FLEXBUS1_D0	GPIO3_D5_d	3.3V
43	LCDC_CLK/EBC_SDOE/DSMC_RESETN	UART5_RTS_M0/SPI3_CSN1_M1/SAI4_SCLK_M1/FLEXBUS1_D12_M0/FLEXBUS0_D15_M0/FLEXBUS1_CSn_M1/CAM_CLK0_OUT_M0	GPIO3_D7_d/ PWM2_CH7_M3	3.3V
44	DSMC_INT0/GPIO4_A0_d	I2C7_SCL_M2/UART3_TX_M0/SPI1_CSN1_M2/SAI4_LRCK_M1/FLEXBUS1_D14_M0/FLEXBUS0_D13_M0/FLEXBUS1_CSn_M3/CAM_CLK1_OUT_M0	GPIO4_A0_d/ MIPI_TE_M2/ SPDIF_RX0_M1	3.3V
45	DSMC_INT2/GPIO4_A1_d	I2C7_SDA_M2/UART3_RX_M0/SAI4_SDO_M1/FLEXBUS1_D13_M0/FLEXBUS0_D14_M0/FLEXBUS0_CSn_M1/ CAM_CLK2_OUT_M0	GPIO4_A1_d/ VO_POST_EMPTY/ SPDIF_TX0_M1	3.3V
46	PHY1_LED1/CFG_LDO0	Speed LED(PD4.7K)		3.3V
47	PHY1_LED2/CFG_LDO1	Link LED(PU4.7K)		3.3V
48	PHY1_MDI0+			0.5V
49	PHY1_MDI0-			0.5V
50	PHY1_MDI1+			0.5V
51	PHY1_MDI1-			0.5V
52	PHY1_MDI2+			0.5V
53	PHY1_MDI2-			0.5V
54	PHY1_MDI3+			0.5V
55	PHY1_MDI3-			0.5V
56	32KOUT_RTC_1V8	RTC_CLK 32.768KHz output	GPIO0_A2_d(Note1)	1.8V
57	VCC_RTC	RTC Power input		1.8~3.3V
58	LCDC_D0/EBC_SDDO0/DSMC_CSN0	I3C1_SCL_M2/UART2_CTS_M2/SAI2_SDO_M2/FLEXBUS1_D2	GPIO3_D3_d/ PWM2_CH5_M3	3.3V
59	LCDC_D1/EBC_SDDO1/DSMC_CSN3	I3C1_SDA_M2/UART2_RTS_M2/SPI4_CSN1_M1/SAI2_SDI_M2/FLEXBUS0_D12/FLEXBUS0_CS_M3/FLEXBUS1_D15_M0	GPIO3_D2_d/ PWM2_CH4_M3	3.3V

Pin	Signal	Description or functions	GPIO serial	IO Voltage
60	LCDC_D2/EBC_SDDO2/DSMC_CSN2	I3C1_SDA_PU_M2/SPI4_CLK_M1/SAI2_MCLK_M2/FLEXBUS0_D11/FLEXBUS1_CS_M2	GPIO3_D1_d	3.3V
61	LCDC_D3/EBC_SDDO3/DSMC_DATA1	UART8_CTS_M0/SPI1_CSN0_M2/SAI1_MCLK_M1/FLEXBUS1_D3	GPIO3_D0_d/ PWM2_CH3_M3	3.3V
62	LCDC_D4/EBC_SDDO4/DSMC_DATA2	UART8_RTS_M0/SPI1_CLK_M2/SAI1_SCLK_M1/FLEXBUS1_D4	GPIO3_C7_d	3.3V
63	LCDC_D5/EBC_SDDO5/DSMC_DATA3	UART8_TX_M0/SPI1_MOSI_M2/SAI1_LRCK_M1/FLEXBUS1_D5	GPIO3_C6_d	3.3V
64	LCDC_D6/EBC_SDDO6/DSMC_DATA4	UART8_RX_M0/SPI1_MISO_M2/SAI1_SDO0_M1/FLEXBUS1_D6	GPIO3_C5_d/ PWM2_CH2_M3	3.3V
65	LCDC_D7/EBC_SDDO7/DSMC_DATA5	I2C5_SCL_M3/UART11_TX_M0/SPI2_CSN0_M2/SAI1_SDO0_M1/FLEXBUS1_D7/CAN0_TX_M3	GPIO3_C4_d	3.3V
66	LCDC_D8/EBC_SDDO8/DSMC_INT3	I2C9_SDA_M3/UART11_CTS_M0/SPI4_MOSI_M1/SAI2_LRCK_M2/FLEXBUS0_D10/ FLEXBUS0_CSN_M2	GPIO3_C3_d/ PWM2_CH1_M3	3.3V
67	LCDC_D9/EBC_SDDO9/DSMC_INT1	I2C9_SCL_M3/UART11_RTS_M0/SPI4_MISO_M1/SAI2_SCLK_M2/FLEXBUS0_D9	GPIO3_C2_d/ PWM2_CH0_M3	3.3V
68	LCDC_D10/EBC_SDDO10/DSMC_DATA6	I2C5_SCL_M3/UART11_RX_M0/SPI2_MISO_M2/SAI1_SDO2_M1/FLEXBUS1_D8/CAN0_RX_M3	GPIO3_C1_d	3.3V
69	LCDC_D11/EBC_SDDO11/DSMC_DATA7	I2C4_SCL_M3/UART2_TX_M2/UART3_RTS_M1/SAI1_SDO3_M1/FLEXBUS1_D9	GPIO3_C0_d	3.3V
70	LCDC_D12/EBC_SDDO12/DSMC_DQS0	I2C4_SDA_M3/UART2_RX_M2/UART3_CTS_M1/SAI1_SDO0_M1/FLEXBUS1_D10/FLEXBUS1_CSN_M0	GPIO3_B7_d	3.3V
71	LCDC_D13/EBC_SDDO13/DSMC_DQS1	SPI3_CSN0_M1/ETH0_TXCLK_M0/FLEXBUS0_CLK	GPIO3_B6_d/ PWM0_CH1_M3	3.3V
72	LCDC_D14/EBC_SDDO14/DSMC_DATA8	UART9_CTS_M1/ETH0_TXD0_M0/SPDIF_TX1_M0/FLEXBUS0_D0	GPIO3_B5_d/ PWM1_CH5_M3	3.3V

Pin	Signal	Description or functions	GPIO serial	IO Voltage
73	LCDC_D15/EBC_SDDO15/DSMC_DATA9	UART9_RTS_M1/ETH0_TXD1_M0/SPDIF_RX1_M0/FLEXBUS0_D1	GPIO3_B4_d/ PWM1_CH4_M3	3.3V
74	LCDC_D16/EBC_SDCE0/DSMC_DATA10	I2C8_SCL_M3/UART9_TX_M1/ETH0_TXCTL_M0/PDM1_SDI0_M2/FLEXBUS0_D2	GPIO3_B3_d	3.3V
75	LCDC_D17/EBC_SDCE1/DSMC_DATA11	I2C8_SDA_M3/UART9_RX_M1/ETH0_RXD0_M0/PDM1_SDI1_M2/FLEXBUS0_D3	GPIO3_B2_d	3.3V
76	LCDC_D18/EBC_SDCE2/DSMC_DATA12	UART10_TX_M0/SPI4_CSN0_M1/ETH0_RXD1_M0/PDM1_CLK0_M2/FLEXBUS0_D4	GPIO3_B1_d/ PWM1_CH3_M3	3.3V
77	LCDC_D19/EBC_SDCE3/DSMC_CSN1	UART10_RX_M0/SPI2_MOSI_M2/ETH0_MCLK_M0/SAI4_MCLK_M1/FLEXBUS0_D8	GPIO3_B0_d/ PWM0_CH0_M3	3.3V
78	LCDC_D20/EBC_VCOM/DSMC_DATA13	UART10_RTS_M0/UART1_TX_M2/ETH0_RXCTL_M0/PDM1_CLK1_M2/FlexBUS0_D5	GPIO3_A7_d	3.3V
79	LCDC_D21/EBC_GDOE/DSMC_DATA14	UART10_CTS_M0/UART1_RX_M2/ETH0_MDC_M0/PDM1_SDI2_M2/FlexBUS0_D6	GPIO3_A6_d/ PWM1_CH2_M3	3.3V
80	LCDC_D22/EBC_GDSP/DSMC_DATA15	SPI2_CSn1_M2/UART1_RTS_M2/ETH0_MDIO_M0/PDM1_SDI3_M2/FlexBUS0_D7	GPIO3_A5_d/ PWM1_CH1_M3	3.3V
81	LCDC_D23/EBC_SDSHR/DSMC_RDYN	SPI2_CLK_M2/UART1_CTS_M2/ETH0_CLKOUT_25M_M0/SAI4_SDI_M1/FlexBUS1_D11/FlexBUS0_CSn_M0	GPIO3_A4_d/ PWM1_CH0_M3	3.3V
82	TYPEC_DPTX_AUX_PUPDCTL1	AUPLL_CLKIN_M2/SAI1/4_MCLK_M0	GPIO4_A2_d /PWM2_CH5_M0	3.3V
83	PCIE1_CLKREQn_M2	I2C2_SDA_M2/UART5_CTS_M1/SPI4_CS1_M2/SAI1_LRCK_M0/FlexBUS1_D12_M1	GPIO4_A5_d	3.3V
84	PCIE1_PWREN_H	I2C2_SCL_M2/UART5_RTS_M1/SPI3_CS0_M2/SAI1_SCLK_M0/FlexBUS1_CS_M4	GPIO4_A3_d/ PWM2_CH4_M1	3.3V
85	HDMI_TX_ON_H	I2C4_SDA_M1/UART6_RX_M0/SPI3_MISO_M2/SAI4_LRCK_M0/PDM1_CLK0_M1/FlexBUS1_D14_M1/CAN0_RX_M2	GPIO4_A6_d	3.3V

Pin	Signal	Description or functions	GPIO serial	IO Voltage
86	TYPEC_DPTX_AUX_PUPDCTL2	I2C4_SCL_M1/UART6_TX_M0/SPI3_MOSI_M2/SAI4_SCLK_M0/PDM1_SDI3_M1/FlexBUS1_D13_M1/CAN0_TX_M2	GPIO4_A4_d	3.3V
87	HP_CTL_H	SPI3_CLK_M2/SAI4_SDI_M0/SAI1_SDO0_M0	GPIO4_A7_d/ PWM2_CH6_M0	3.3V
88	I2C3_SCL_M0_Sensor	PCIE0_CLKREQ_M2/IUART2_TX_M1/SPDIF_TX0_M0/FlexBUS0_D15_M1/CAN1_TX_M2	GPIO4_B5_d (PU2.2K)	3.3V
89	I2C3_SDA_M0_Sensor	PCIE0_WAKE_M2/IUART2_RX_M1/SPDIF_RX0_M0/FlexBUS0_CSN_M4/CAN1_RX_M2	GPIO4_B4_d (PU2.2K)	3.3V
90	SPK_CTL_H	SPI3_CS1_M2/SPI4_CS0_M2/PDM1_SDI0_M1/SAI1_SDI0_M0/SAI4_SDO_M0	GPIO4_B3_d/ PWM2_CH7_M0	3.3V
91	PCIE1_PERSTn	SPI4_MISO_M2/PDM1_SDI1_M1/SAI1_SDI1_M0/SAI1_SDO3_M0/FlexBUS1_D15_M1	GPIO4_B2_d/ MIPI_TE_M0	3.3V
92	IRC_BIN	UART2_CTS_M1/UART6_CTS_M0/UART5_RX_M1/SPI4_MOSI_M2/PDM1_SDI2_M1/SAI1_SDI2_M0/SAI1_SDO2_M0/FlexBUS1_D14_M1	GPIO4_B1_d	3.3V
93	IRC_AIN	UART2_RTS_M1/UART6_RTS_M0/UART5_TX_M1/SPI4_CLK_M2/PDM1_CLK1_M1/SAI1_SDI3_M0/SAI1_SDO1_M0/FlexBUS1_D13_M1	GPIO4_B1_d	3.3V
94	PCIE0_CLKREQn_M3	I2C6_SCL_M3/SPI4_MISO_M0/SAI4_SDI_M2/VP1_SYNC_OUT/CAN1_TX_M1	GPIO4_C6_d/ PWM2_CH2_M1/ SATA0_ACTLED_M1	3.3V
95	PCIE0_PERSTn	I2C6_SDA_M3/SPI4_CLK_M0/SAI4_SCLK_M2/VP2_SYNC_OUT/CAN1_RX_M1	GPIO4_C7_d/ PWM2_CH3_M1	3.3V
96	PWM2_CH5_M1_FAN	I2C3_SDA_M3/UART6_RX_M3/SPI4_MOSI_M0/SAI4_SDO_M2/VP0_SYNC_OUT/ISP_FLASH_TRIGOUT_M1	GPIO4_C5_d/ PWM2_CH5_M1/ SATA1_ACTLED_M1 PCIE0_WAKE_M3	3.3V

Pin	Signal	Description or functions	GPIO serial	IO Voltage
97	HDMI_TX_HPDIN_M0	I2C7_SDA_M3/UART11_RX_M2/EDP_HPD_M0/PCIE1_CLKREQ_M3/DSM_ALN_M1	GPIO4_C1_d/ PWM0_CH1_M1	3.3V
98	HDMI_TX_SDA	I2C2_SDA_M3/UART9_RX_M2/CAN0_RX_M1/DSM_ARN_M1	GPIO4_C3_d/ PWM2_CH1_M1	3.3V
99	HDMI_TX_SCL	I2C2_SCL_M3/UART9_TX_M2/CAN0_TX_M1/DSM_ARP_M1	GPIO4_C2_d/ PWM2_CH0_M1	3.3V
100	DP_HPDIN_M0	I2C3_SCL_M3/UART6_TX_M3/SPI4_CSn0_M0/SAI4_LRCK_M2/ISP_PRLIGHT_TRIG_M1	GPIO4_C4_d/ PWM2_CH6_M1	3.3V
101	HDMI_TX_CEC_M0	I2C7_SCL_M3/UART11_TX_M2/SPI4_CSn1_M0/SAI_MCLK_M2/DSM_ALP_M1	GPIO4_C0_d/ PWM1_CH5_M1/ PCIE1_WAKE_M3	3.3V
102	GND	Ground		0V
103	MIPI_DPHY_CSI0_PWREN_H_1V8	UART3_RTS_M0/SPI3_CSn0_M0/SAI3_SDI_M2/ETH0_RXD1_M1/CAN_RX_M3	GPIO3_A3_d/ VI_CIF_CLKI/ SPDIF_TX1_M1	1.8V
104	SAI0_SDI0_M0_1V8	UART1_TX_M1/PDM0_SDI3_M3/ETH0_TXD1_M1	GPIO2_B0_d/ VI_CIF_D13	1.8V
105	SAI0_SDI1_M0_1V8	UART1_RX_M1/PDM0_SDI2_M3/ETH0_TXD0_M1	GPIO2_B1_d/ VI_CIF_D12	1.8V
106	SAI0_SDI2_M0_1V8	UART1_CTS_M1/SPI4_CSn0_M3/PDM0_SDI1_M3/PCIE0_CLKREQ_M0	GPIO2_B2_d/ VI_CIF_D11	1.8V
107	SAI0_SDI3_M0_1V8	UART7_CTS_M1/SPI4_MOSI_M3/PDM0_SDI0_M3/SATA0_ACTLED_M0	GPIO2_B4_d/ VI_CIF_D9	1.8V
108	SAI0_SCLK_M0_1V8	I2C8_SCL_M2/UART8_CTS_M1/UART7_RX_M0	GPIO2_B6_d	1.8V
109	SAI0_LRCK_M0_1V8	I2C8_SDA_M2/UART8_RTS_M1/UART7_TX_M0	GPIO2_B7_d	1.8V
110	SAI0_MCLK_M0_1V8	UART7_RTS_M0/SPI4_MISO_M3/PDM0_CLK0_M3/SATA1_ACTLED_M0	GPIO2_B5_d/ VI_CIF_D8	1.8V
111	SAI0_SDO0_M0_1V8	I2C4_SCL_M2/UART8_TX_M1/SPI4_CSn1_M3/ETH0_RXD0_M1	GPIO2_A6_d/ VI_CIF_D15	1.8V
112	SAI0_SDO1_M0_1V8	I2C4_SDA_M2/UART8_RX_M1/ETH0_TXCTL_M1	GPIO2_A7_d/ VI_CIF_D14	1.8V

Pin	Signal	Description or functions	GPIO serial	IO Voltage
113	SAI0_SDO2_M0_1V8	UART1_RTS_M1/SPI4_CLK_M3/PDM0_CLK1_M3/PCIE1_CLKREQ_M0	GPIO2_B3_d/ VI_CIF_D10	1.8V
114	SPDIF_RX1_M1_1V8	UART3_RTS_M0/SPI3_MISO_M0/SAI3_SDO_M2/ETH0_RXCTL_M1/CAN_TX_M3	GPIO3_A2_d/ VI_CIF_CLKO/ MIPI_TE_M1	1.8V
115	I2C7_SDA_M1_1V8	UART3_RX_M0/SPI3_MOSI_M0/SAI3_LRCK_M2/ETH0_MDC_M1(PU2.2K)	GPIO3_A1_d/ VI_CIF_VSYNC	1.8V
116	I2C7_SCL_M1_1V8	UART3_TX_M0/SPI3_CLK_M0/SAI3_SCLK_M2/ETH0_MDIO_M1(PU2.2K)	GPIO3_A0_d/ VI_CIF_HREF	1.8V
117	GND	Ground		0V
118	DP_TX_AUXP			0.5V
119	DP_TX_AUXN			0.5V
120	USB2_OTG1_DP			0.5V
121	USB2_OTG1_DM			0.5V
122	USB2_OTG0_DP			0.5V
123	USB2_OTG0_DM			0.5V
124	USB3_OTG0_SSRX1N /DP_TX_D0N			0.5V
125	USB3_OTG0_SSRX1P /DP_TX_D0P			0.5V
126	USB3_OTG0_SSTX1P/ DP_TX_D1P			0.5V
127	USB3_OTG0_SSTX1N/ DP_TX_D1N			0.5V
128	USB3_OTG0_SSRX2N /DP_TX_D2N			0.5V
129	USB3_OTG0_SSRX2P /DP_TX_D2P			0.5V
130	USB3_OTG0_SSTX2P/ DP_TX_D3P			0.5V
131	USB3_OTG0_SSTX2N/ DP_TX_D3N			0.5V
132	GND	Ground		0V
133	MIPI_DPHY_DSI_TX_D0N	MIPI_CPHY_DSI_TX_TRIO0A		0.5V
134	MIPI_DPHY_DSI_TX_D0P	MIPI_CPHY_DSI_TX_TRIO0B		0.5V
135	MIPI_DPHY_DSI_TX_D1N	MIPI_CPHY_DSI_TX_TRIO0C		0.5V

Pin	Signal	Description or functions	GPIO serial	IO Voltage
136	MIPI_DPHY_DSI_TX_D1P	MIPI_CPHY_DSI_TX_TRIO1A		0.5V
137	MIPI_DPHY_DSI_TX_CLKN	MIPI_CPHY_DSI_TX_TRIO1B		0.5V
138	MIPI_DPHY_DSI_TX_CLKP	MIPI_CPHY_DSI_TX_TRIO1C		0.5V
139	MIPI_DPHY_DSI_TX_D2N	MIPI_CPHY_DSI_TX_TRIO2A		0.5V
140	MIPI_DPHY_DSI_TX_D2P	MIPI_CPHY_DSI_TX_TRIO2B		0.5V
141	MIPI_DPHY_DSI_TX_D3N	MIPI_CPHY_DSI_TX_TRIO2C		0.5V
142	MIPI_DPHY_DSI_TX_D3P			0.5V
143	MIPI_DPHY_CSI0_RX_D0P	MIPI_CPHY_CSI_TX_TRIO0B		0.5V
144	MIPI_DPHY_CSI0_RX_D0N	MIPI_CPHY_CSI_TX_TRIO0A		0.5V
145	MIPI_DPHY_CSI0_RX_D1P	MIPI_CPHY_CSI_TX_TRIO1A		0.5V
146	MIPI_DPHY_CSI0_RX_D1N	MIPI_CPHY_CSI_TX_TRIO0C		0.5V
147	MIPI_DPHY_CSI0_RX_CLKP	MIPI_CPHY_CSI_TX_TRIO1C		0.5V
148	MIPI_DPHY_CSI0_RX_CLKN	MIPI_CPHY_CSI_TX_TRIO1B		0.5V
149	MIPI_DPHY_CSI0_RX_D2P	MIPI_CPHY_CSI_TX_TRIO2B		0.5V
150	MIPI_DPHY_CSI0_RX_D2N	MIPI_CPHY_CSI_TX_TRIO2A		0.5V
151	MIPI_DPHY_CSI0_RX_D3P			0.5V
152	MIPI_DPHY_CSI0_RX_D3N	MIPI_CPHY_CSI_TX_TRIO2C		0.5V
153	GND	Ground		0V
154	HDMI_TX_D3N	EDP_TX3N		0.5V
155	HDMI_TX_D3P	EDP_TX3P		0.5V
156	HDMI_TX_D0P	EDP_TX0P		0.5V
157	HDMI_TX_D0N	EDP_TX0N		0.5V
158	HDMI_TX_D1P	EDP_TX1P		0.5V
159	HDMI_TX_D1N	EDP_TX1N		0.5V
160	HDMI_TX_D2P	EDP_TX2P		0.5V

Pin	Signal	Description or functions	GPIO serial	IO Voltage
161	HDMI_TX_D2N	EDP_TX2N		0.5V
162	HDMI_TX_SBDN	EDP_AUXN		0.5V
163	HDMI_TX_SBDP	EDP_AUXP		0.5V
164	GND	Ground		0V
165	MIPI_DPHY_CSI2_RX _CLKP			0.5V
166	MIPI_DPHY_CSI2_RX _CLKN			0.5V
167	MIPI_DPHY_CSI1_RX _CLKN			0.5V
168	MIPI_DPHY_CSI1_RX _CLKP			0.5V
169	MIPI_DPHY_CSI1_RX _D3N	MIPI_DPHY_CSI2_RX_D1N		0.5V
170	MIPI_DPHY_CSI1_RX _D3P	MIPI_DPHY_CSI2_RX_D1P		0.5V
171	MIPI_DPHY_CSI1_RX _D2N	MIPI_DPHY_CSI2_RX_D0N		0.5V
172	MIPI_DPHY_CSI1_RX _D2P	MIPI_DPHY_CSI2_RX_D0P		0.5V
173	MIPI_DPHY_CSI1_RX _D1N			0.5V
174	MIPI_DPHY_CSI1_RX _D1P			0.5V
175	MIPI_DPHY_CSI1_RX _D0N			0.5V
176	MIPI_DPHY_CSI1_RX _D0P			0.5V
177	VCC_1V8_S3	1.8V GPIO Power output	Max 500mA	1.8V
178	USB2_OTG1_VBUSDE T	USB2 VBUS Input		3.3V
179	TP_INT_L	I3C0_SDA_PU_M0/UART10 _RX_M2/SAI0_SDO0_M1/D P_HPD_M1	GPIO0_C5_d	3.3V
180	LCD_BL_PWM1_CH1_ M0	I2C1_SDA_M1/UART4_RX_ M2/REFCLK2_OUT	GPIO0_B5_d/ PWM1_CH1_M0	3.3V
181	PCIE1_WAKEn_M0	I2C4_SDA_M0/UART1_RTS _M0/PDM0_SDI3_M0/SAI0_ SDO1/SDI3_M1	GPIO0_D3_d/ PWM2_CH0_M0	3.3V
182	GPIO0_B4_d	I2C1_SCL_M1/UART4_TX_ M2/REFCLK1_OUT	PWM1_CH0_M0	3.3V

Pin	Signal	Description or functions	GPIO serial	IO Voltage
183	USBCC_INT_L	SPI0_MISO_M0/PDM0_SDI1_M0/SAI0_SDO3/SDI1_M1	GPIO0_D1_d	3.3V
184	PCIE0_PWREN_H	I2C3_SDA_M1/SPI0_CLK_M0/SAI0_LRCK_M1	GPIO0_C7_d	3.3V
185	PCIE0_WAKEn_M0	I2C4_SCL_M0/UART1_CTS_M0/PDM0_SDI2_M0/SAI0_SDO2/SDI2_M1	GPIO0_D2_d/ PWM1_CH5_M0	3.3V
186	LCD_PWREN_H	I2C3_SCL_M1/SPI0_CSn0_M0/SAI0_SCLK_M1	GPIO0_C6_d	3.3V
187	I2C2_SCL_M0_CC_RTC	UART1_TX_M0/PWM1_CH4_M0(PU2.2K)	GPIO0_B7_d	3.3V
188	I2C2_SDA_M0_CC_RTC	UART1_RX_M0/PWM1_CH3_M0(PU2.2K)	GPIO0_C0_d	3.3V
189	GPIO0_C4_d	UART10_TX_M2/PDM0_CLK0_M0/SAI0_MCLK_M1	PWM0_CH0_M0	3.3V
190	I2C0_SCL_M1_TP	I3C0_SCL_M0/UART8_TX_M2(PU2.2K)	GPIO0_C1_d	3.3V
191	I2C0_SDA_M1_TP	I3C0_SDA_M0/UART8_RX_M2(PU2.2K)	GPIO0_C2_d	3.3V
192	TP_RST_L	SPI0_MOSI_M0/PDM0_SDI0_M0/SAI0_SDI0_M1	GPIO0_D0_d	3.3V
193	GND	Ground		0V
194	PCIE0_RXP	SATA0_RXP		0.5V
195	PCIE0_RXN	SATA0_RXN		0.5V
196	PCIE0_TXN	SATA0_TXN		0.5V
197	PCIE0_TXP	SATA0_TXP		0.5V
198	PCIE0_REFCLKP			0.5V
199	PCIE0_REFCLKN			0.5V
200	PCIE1_TXP	SATA1_TXP/USB3_OTG1_SSTXP		0.5V
201	PCIE1_TXN	SATA1_TXN/USB3_OTG1_SSTXN		0.5V
202	PCIE1_RXP	SATA1_RXP/USB3_OTG1_SSRXP		0.5V
203	PCIE1_RXN	SATA1_RXN/USB3_OTG1_SSRXN		0.5V
204	PCIE1_REFCLKP			0.5V
205	PCIE1_REFCLKN			0.5V
206	GND	Ground		0V
207	MIPI_DPHY_CSI4_RX_CLKP			0.5V

Pin	Signal	Description or functions	GPIO serial	IO Voltage
208	MIPI_DPHY_CSI4_RX _CLKN			0.5V
209	MIPI_DPHY_CSI3_RX _D3N	MIPI_DPHY_CSI4_RX_D1N		0.5V
210	MIPI_DPHY_CSI3_RX _D3P	MIPI_DPHY_CSI4_RX_D1P		0.5V
211	MIPI_DPHY_CSI3_RX _D2N	MIPI_DPHY_CSI4_RX_D0N		0.5V
212	MIPI_DPHY_CSI3_RX _D2P	MIPI_DPHY_CSI4_RX_D0P		0.5V
213	MIPI_DPHY_CSI3_RX _CLKN			0.5V
214	MIPI_DPHY_CSI3_RX _CLKP			0.5V
215	MIPI_DPHY_CSI3_RX _D1N			0.5V
216	MIPI_DPHY_CSI3_RX _D1P			0.5V
217	MIPI_DPHY_CSI3_RX _D0N			0.5V
218	MIPI_DPHY_CSI3_RX _D0P			0.5V
Note: ***1. Can change to GPIO，if RTC IC no needed。***				

1.7 Development Kit (EM3576)

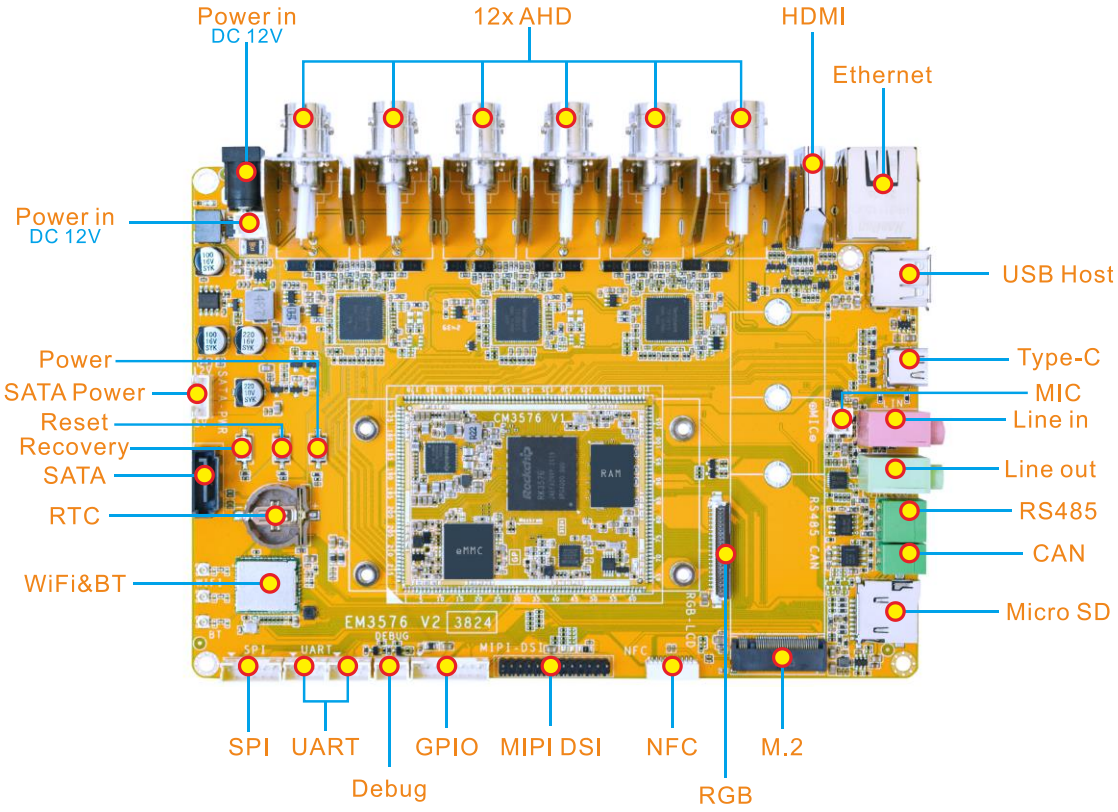

2 Hardware Design Guide

2.1 Peripheral Circuit Reference

2.1.1 External Power

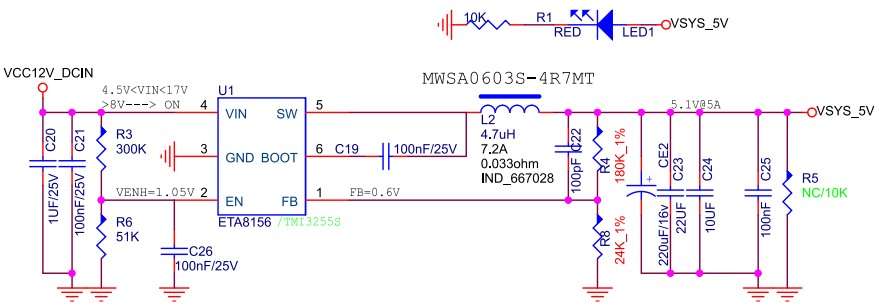

2.1.2 Debug Circuit

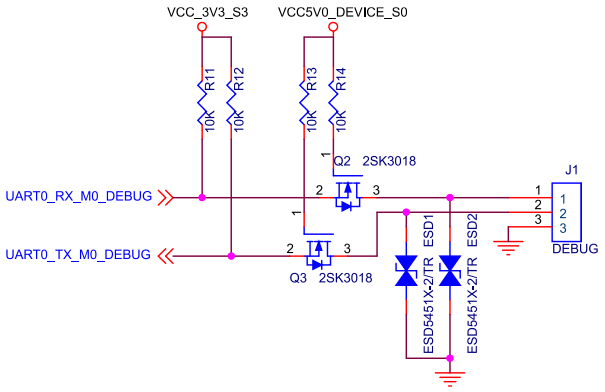

2.1.3 HDMI TX Circuit

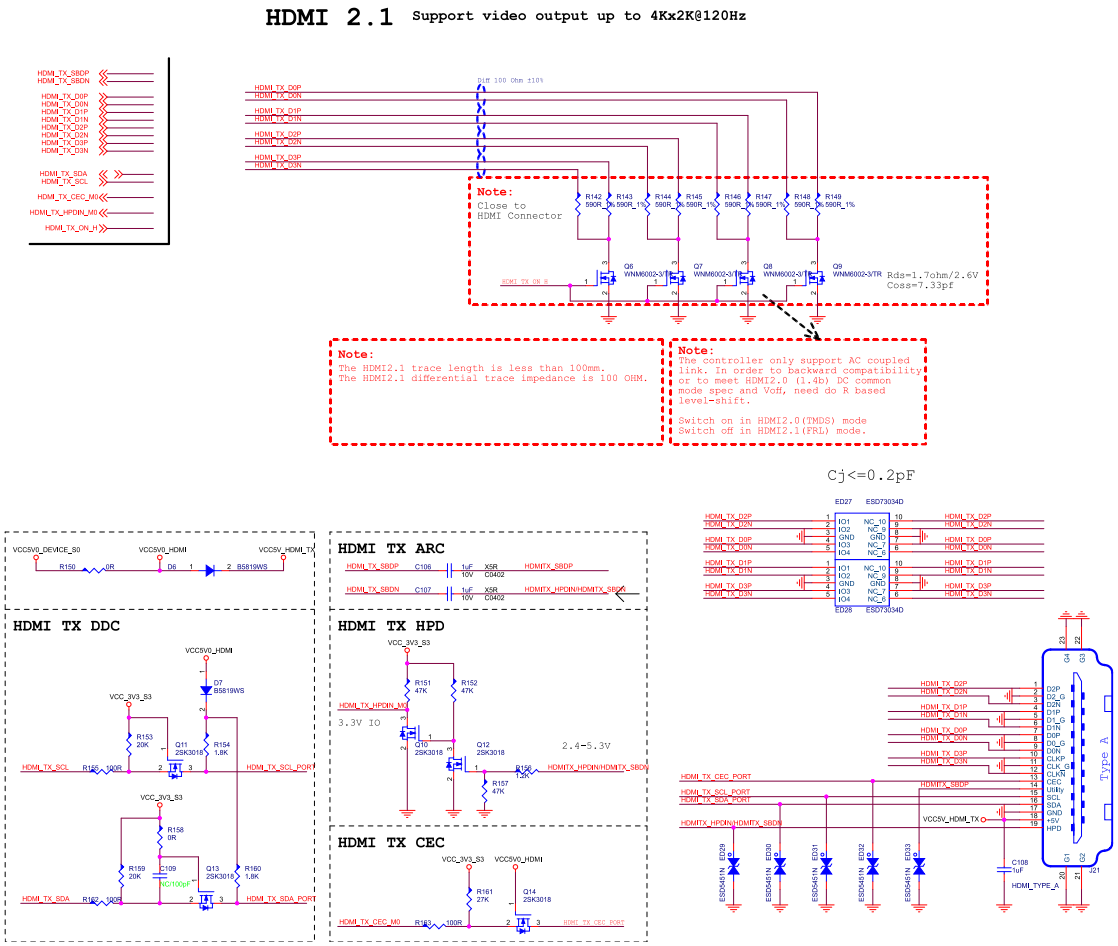

2.2 Mother Board Length Offset

MIPI CSI0 4-Lane Interface length offset			
MIPI_CSI0_RX0_CLKP	MIPI_CSI0_RX0_D0P	(53.5)	(+40)
	MIPI_CSI0_RX0_D1P	(35.046)	(+30)
	MIPI_CSI0_RX0_D2P		
	MIPI_CSI0_RX0_D3P	(-25.758)	(-30)

Yellow block is CM3576 CSI0 group length difference. Unit: mil

2.3 PCB Footprint (Top View)

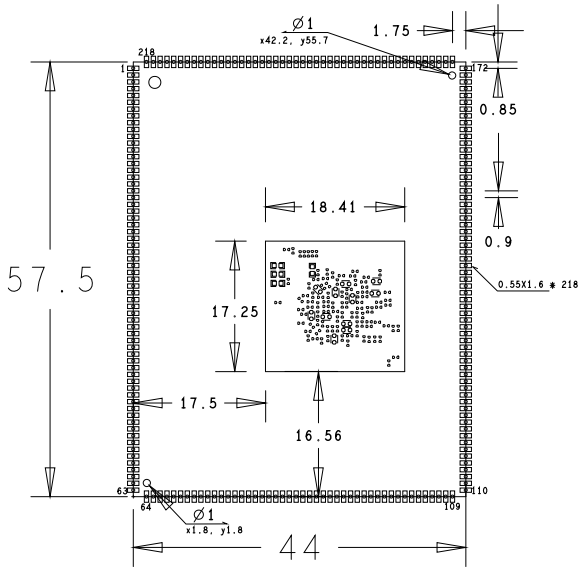

3 Product Electrical Characteristics

3.1 Dissipation and Temperature

Symbol	Parameter		Min	Typ	Max	Unit
VCC_SYS	System Voltage		3.4V	4	5.5	V
Isys_in	VCC_SYS input Current			1750		mA
VCC_RTC	RTC Voltage		1.8	3	3.4	V
Iirtc	RTC input Current			5	8	uA
I3v3_out	VCC_3V3 output Current				500	mA
I1v8_out	VCC_1V8 output Current				500	mA
Ta	Operating Temperature	Commercial	0	NA	70	°C
		Industrial	-40	NA	85	°C
Tstg	Storage Temperature		-40		85	°C

3.2 Reliability of Test

High Temperature Operating Test		
Contents	Operating 8h in high temperature	55°C±2°C
Result	TBD	

Operating Life Test		
Contents	Operating in room	120h
Result	TBD	

3.3 Certification

EMTEK
Access to the World

Certificate of Conformity

NO.: ENS2502130182E00101C

The following product has been tested by us with the listed standards and found in conformity with the council EMC directive 2014/30/EU. This is to certify that the specimen is in conformity with the assessment requirement mentioned follow. This certificate does not imply assessment to the production of the product.

Applicant	:	BOARDCON EMBEDDED DESIGN LIMITED
Address	:	2508-2509 Haofang Tianji Plaza, 11008 Beihuan Avenue, Nanshan District, Shenzhen, Guangdong, China. 518051
Manufacturer	:	BOARDCON EMBEDDED DESIGN LIMITED
Address	:	2508-2509 Haofang Tianji Plaza, 11008 Beihuan Avenue, Nanshan District, Shenzhen, Guangdong, China. 518051
Trade Mark	:	BOARDCON Embedded Design
EUT	:	CM3576 system-on-module
M/N	:	CM3576
Test Standards	:	EN 55032:2015+A1:2020 EN IEC 61000-3-2:2019+A2:2024 EN 61000-3-3:2013+A2:2021 EN 55035:2017+A11:2020
Version	:	Ver.1.0

EMTEK (SHENZHEN) CO., LTD. CERTIFICATE

(Manager)
February 26, 2025

The certificate is based on a single evaluation of one sample of above-mentioned products. It does not imply an assessment of the whole production and does not permit the use of the test lab logo.

EMTEK (Shenzhen) Co., Ltd.
Add: Building 69, Majialong Industry Zone, Nanshan District, Shenzhen, Guangdong, China Http://www.emtek.com.cn E-mail: cs.rep@emtek.com.cn