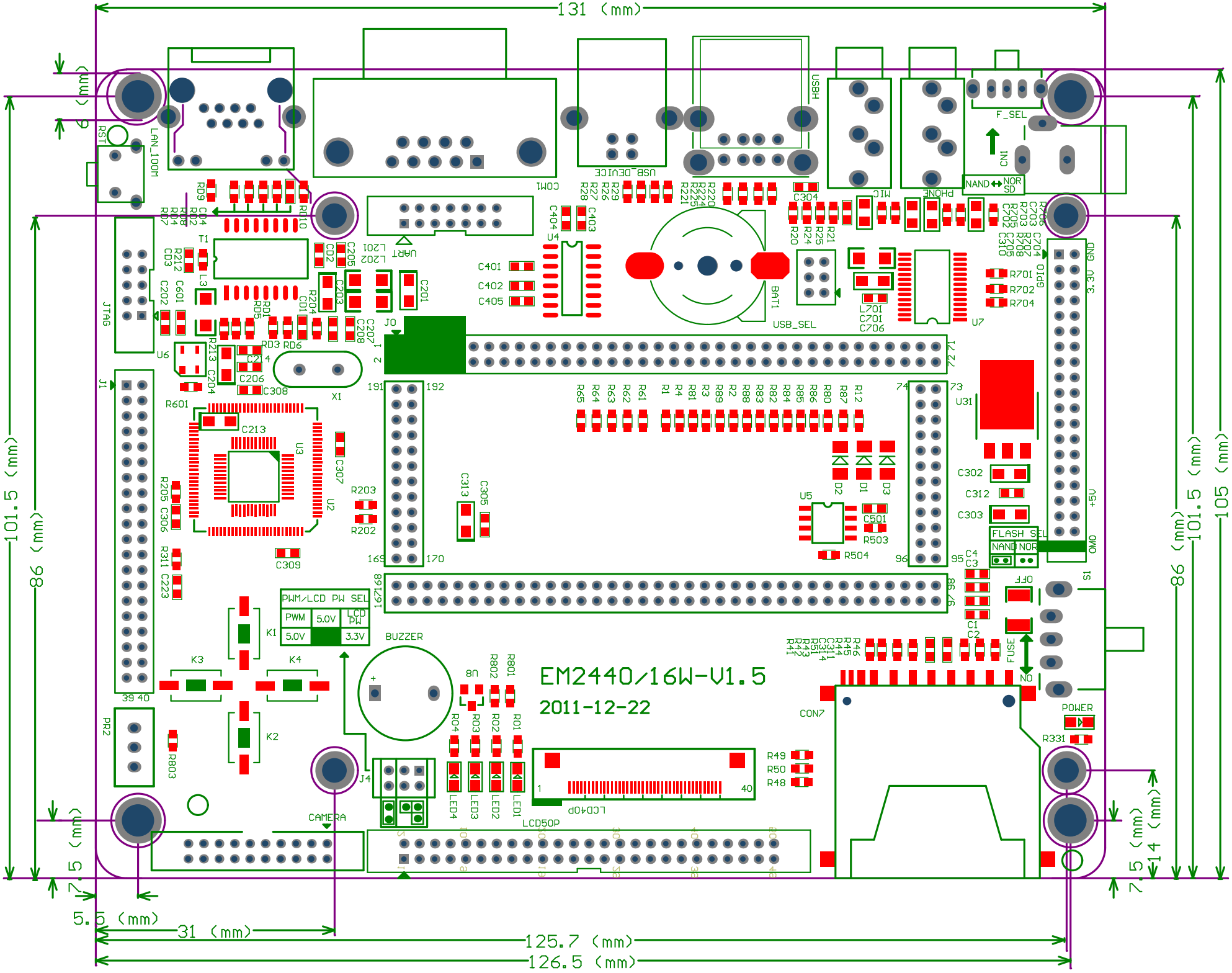
131 (mm)
6 (mm)
101.5 (mm)
86 (mm)
105 (mm)
7.5 (mm)
14 (mm)
5.5 (mm)
31 (mm)
125.7 (mm)
126.5 (mm)
EM2440/16W-V1.5
2011-12-22
PWM/LCD PW SEL
PWM
5.0V
LCD PW
5.0V
3.3V
BUZZER
CAMERA
LCD50P
LCD40P
CON7
POWER
FLASH SEL
NAND
NOR
F_SEL
USB_SEL
USB_DEVICE
USBH
COM1
UART
LAN_100M
RST
JTAG
GND
3.3V
+5V
OFF
FUSE
NO
S1
U31
U7
U5
U6
U3
U2
U4
U8
T1
X1
J0
J1
J4
PR2
K1
K2
K3
K4
LED1
LED2
LED3
LED4
BAT1
MIC
PHONE
CN1
NAND
NOR
SD